Transient conductive-radiative heat transfer: Discrete existence and uniqueness for a finite volume scheme*

Olaf Klein and Peter Philip

September 26, 2003

Abstract

This article presents a finite volume scheme for transient nonlinear heat transport equations coupled by nonlocal interface conditions modeling diffuse-gray radiation between the surfaces of (both open and closed) cavities. The model is considered in three space dimensions; modifications for the axisymmetric case are indicated. Proving a maximum principle as well as existence and uniqueness for roots to a class of discrete nonlinear operators that can be decomposed into a scalar-dependent sufficiently increasing part and a benign rest, we establish a discrete maximum principle for the finite volume scheme, yielding discrete L^∞-L^∞ a priori bounds as well as a unique discrete solution to the finite volume scheme.

2000 Mathematics Subject Classification: 45K05, 65M99, 35K05, 35K55, 65N22, 47H10, 80A20.

Keywords and Phrases: Integro-partial differential equations. Finite volume method. Nonlinear parabolic PDEs. Integral operators. Nonlocal interface conditions. Diffuse-gray radiation. Maximum principle.

1 Introduction

Modeling and numerical simulation of conductive-radiative heat transfer has become a standard tool to support and improve numerous industrial processes such as crystal

*This work has been supported by the DFG Research Center "Mathematics for key technologies" (FZT 86) in Berlin and by the German Federal Ministry for Education and Research (BMBF) within the program "Neue Mathematische Verfahren in Industrie und Dienstleistungen" ("New Mathematical Methods in Manufacturing and Service Industry") # 03SPM3B5.

growth by the Czochralski method and by the physical vapor transport method (see [DNR+90] and [KPSW01], respectively) to mention just two examples.

The physical modeling of conductive-radiative heat transfer is well-understood (see e.g. [SC78], [Mod93]), and, for models of diffuse-gray radiation, a mathematical theory of existence and uniqueness of weak solutions has been developed in recent years (see [LT01] and references therein). Mathematical treatments of discretization methods in the context of conductive-radiative heat transfer are still scarce in the literature, especially, if one is interested in nonconvex domains containing nonconvex cavities. For such a general situation, the authors are only aware of [Tii98], where a finite element approximation is considered for a stationary conductive-radiative heat transfer problem.

Mathematical research on the finite volume method has been very active in recent years (see [EGH00] for an extensive survey). However, to the authors' knowledge, a finite volume discretization of the equations governing conductive-radiative heat transfer has not yet been studied in a mathematical context, even though, as e.g. shown by the numerical results in [KPSW01] and [KP03], it has been used to develop efficient and accurate codes for numerical simulations.

The purpose of this article is to derive and analyze a finite volume discretization of transient heat equations coupled by nonlocal operators modeling diffuse-gray radiation between surfaces of cavities within a rigorous mathematical framework. The general setting is somewhat similar to [Tii98], however, in contrast to [Tii98], in the present article, transient heat transport is treated, and heat conduction is also considered inside closed cavities, with a jumping diffusion coefficient at the interface. Moreover, the emissivity is allowed to depend on the temperature.

The finite volume scheme leads to a nonlinear and nonlocal system of equations, the solvability of which is not at all obvious. The proof of existence and uniqueness of a discrete solution is based on a maximum principle for the discrete nonlinear operator as well as on monotonicty and regularity considerations. The maximum principle, existence and uniqueness are first established for roots to a class of continuous discrete nonlinear operators $\mathcal{H}$, where it is assumed that the components $\mathcal{H}_i$ of $\mathcal{H}$ can be decomposed into sufficiently increasing scalar-dependent continuous functions b_i and $\tilde{h}_i$, and a Lipschitz continuous vector-dependent function $\tilde{g}_i$ such that $\tilde{g}_i - \tilde{h}_i$ satisfy a boundedness condition (s. Th. 4.2). Further research concerning the convergence of the scheme and corresponding error estimates is currently under way.

The paper is organized as follows: In Sec. 2, the governing equations of transient conductive heat transfer are stated, completed by nonlocal interface and boundary conditions arising from the modeling of diffuse-gray radiation. Section 2 also provides the precise mathematical setting. The discrete scheme is developed in Sec. 3, where the nonlocal radiation operators are discretized in 3.3, also providing some important properties of the resulting discrete nonlocal operators. Section 3.6 discusses modifications occurring in the axisymmetric case. The proof of existence and uniqueness of a discrete solution to the finite volume scheme is the subject of Sec. 4,

where the root problem is solved in 4.1, and the finite volume scheme is considered in 4.2. The main result is presented in Th. 4.5.

2 Transient Heat Transport Including Conduction and Diffuse-Gray Radiation

2.1 Transient Heat Equations

Transient conductive-radiative heat transport is considered on a time-space cylinder $[0,T] \times \overline{\Omega}$, where:

(A-1) $T \in \mathbb{R}^+$, $\overline{\Omega} = \overline{\Omega}_{\mathrm{s}} \cup \overline{\Omega}_{\mathrm{g}}$, $\Omega_{\mathrm{s}} \cap \Omega_{\mathrm{g}} = \emptyset$, and each of the sets Ω, Ω_{s}, Ω_{g}, is a nonvoid, polyhedral, bounded, and open subset of $\mathbb{R}^3$.

The set Ω_{s} represents the domain of a solid apparatus enclosing gas cavities represented by Ω_{g}. That Ω_{g} is enclosed by Ω_{s} means (see Fig. 1):

(A-2) $\partial\Omega_{\mathrm{s}} = \partial\Omega \,\dot\cup\, \partial\Omega_{\mathrm{g}}$, where $\dot\cup$ denotes a disjoint union. Thus, $\Sigma := \partial\Omega_{\mathrm{g}} = \overline{\Omega}_{\mathrm{s}} \cap \overline{\Omega}_{\mathrm{g}}$, and $\partial\Omega = \partial\Omega_{\mathrm{s}} \setminus \Sigma$.

Heat conduction is considered throughout $\overline{\Omega}$. Nonlocal radiative heat transport is considered between points on the surface Σ of Ω_{g} as well as between points on the surfaces of open cavities (such as O_1 and O_2 in Fig. 1). However, to avoid introducing additional boundary conditions, open cavities are not part of $\overline{\Omega}$, i.e. heat conduction is *not* considered in open cavities (see Sec. 2.3 below for details).

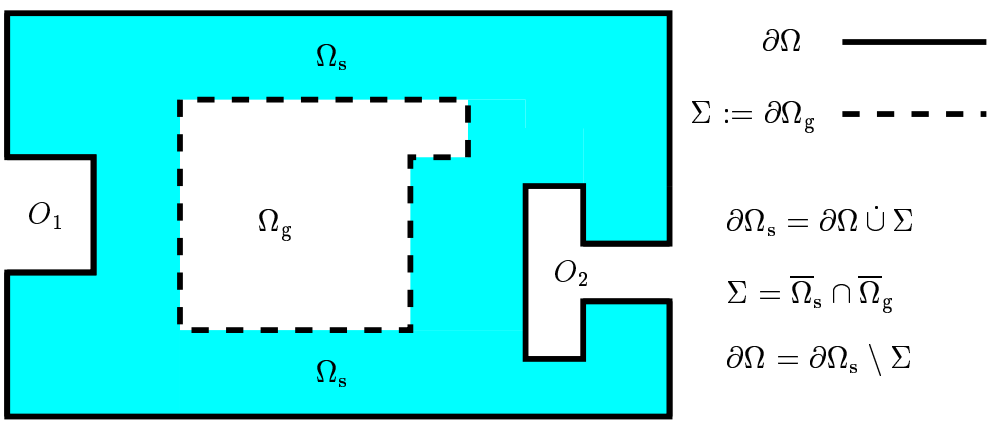

Figure 1: Possible shape of a 2-dimensional section through the 3-dimensional domain $\overline{\Omega} = \overline{\Omega}_{\mathrm{s}} \cup \overline{\Omega}_{\mathrm{g}}$ with open cavities O_1 and O_2. Note that, according to (A-2), Ω_{g} is engulfed by Ω_{s}, which can not be seen in the 2-dimensional section.

Transient heat conduction is described by

$$\frac{\partial \varepsilon_m(\theta)}{\partial t} - \operatorname{div}(\kappa_m \nabla \theta) = f_m(t,x) \quad \text{in } \Omega_m \qquad (m \in \{\mathrm{s},\mathrm{g}\}), \tag{2.1}$$

where $\theta(t,x) \in \mathbb{R}_0^+$ represents absolute temperature, depending on the time coordinate t and on the space coordinate x; the continuous, strictly increasing, nonnegative functions $\varepsilon_m \in C(\mathbb{R}_0^+, \mathbb{R}_0^+)$ represent the internal energy in the solid and in the gas, respectively, $\kappa_m \in \mathbb{R}_0^+$ represent the thermal conductivity in solid and gas, respectively, assumed constant for simplicity, and f_m is a heat source due to some heating mechanism. In practice, for many heating mechanisms such as induction or resistance heating, one has $f_{\mathrm{g}} = 0$.

Throughout this paper, (A-3) – (A-5) are assumed, where:

(A-3) For $m \in \{\mathrm{s}, \mathrm{g}\}$, $\varepsilon_m : \mathbb{R}_0^+ \longrightarrow \mathbb{R}_0^+$ is continuous and at least of linear growth, i.e. there is $C_\varepsilon \in \mathbb{R}^+$ such that

$$\varepsilon_m(\theta_2) \geq (\theta_2 - \theta_1)\, C_\varepsilon + \varepsilon_m(\theta_1) \qquad (\theta_2 \geq \theta_1 \geq 0).$$

(A-4) For $m \in \{\mathrm{s}, \mathrm{g}\}$: $\kappa_m \in \mathbb{R}_0^+$.

(A-5) For $m \in \{\mathrm{s}, \mathrm{g}\}$: $f_m \in L^\infty(0, T, L^\infty(\Omega_m))$, $f_m \geq 0$ a.e.

2.2 Nonlocal Interface Conditions

For simplicity, the temperature is assumed to be continuous at the interface Σ:

$$\theta(t,\cdot)\restriction_{\overline{\Omega}_{\mathrm{s}}} = \theta(t,\cdot)\restriction_{\overline{\Omega}_{\mathrm{g}}} \quad \text{on } \Sigma \quad (t \in [0,T]), \tag{2.2}$$

where $\restriction$ denotes restriction. Continuity of the heat flux on the interface between solid and gas, where one needs to account for radiosity R and for irradiation J, yields the following interface condition, coupling the two equations in (2.1) ($m \in \{\mathrm{s}, \mathrm{g}\}$):

$$(\kappa_{\mathrm{g}}\, \nabla\, \theta)\restriction_{\overline{\Omega}_{\mathrm{g}}} \bullet \mathbf{n}_{\mathrm{g}} + R(\theta) - J(\theta) = (\kappa_{\mathrm{s}}\, \nabla\, \theta)\restriction_{\overline{\Omega}_{\mathrm{s}}} \bullet \mathbf{n}_{\mathrm{g}} \quad \text{on } \Sigma. \tag{2.3}$$

Here, "$\bullet$" denotes the scalar product, and $\mathbf{n}_{\mathrm{g}}$ denotes the unit normal vector pointing from gas to solid.

It is assumed that the solid is opaque, and $R(\theta)$ and $J(\theta)$ are computed according to the net radiation model for diffuse-gray surfaces, i.e. reflection and emittance are taken to be independent of the angle of incidence and independent of the wavelength. At each point of the surface Σ of the gas cavity, the radiosity is the sum of the emitted radiation $E(\theta)$ and of the reflected radiation $J_{\mathrm{r}}(\theta)$:

$$R = E + J_{\mathrm{r}}. \tag{2.4}$$

According to the Stefan-Boltzmann law,

$$E(\theta) = \sigma\, \epsilon(\theta) \cdot \theta^4, \tag{2.5}$$

where it is assumed that

(A-6) $\sigma \in \mathbb{R}^+, \quad \epsilon : \mathbb{R}_0^+ \longrightarrow]0,1]$ is continuous.

Here, σ represents the Boltzmann radiation constant, and ϵ represents the potentially temperature-dependent emissivity of the solid surface.

Using the presumed opaqueness together with Kirchhoff's law yields

$$J_{\mathrm{r}} = (1-\epsilon)\cdot J. \tag{2.6}$$

Due to diffuseness, the irradiation can be calculated as

$$J(\theta) = K(R(\theta)) \tag{2.7}$$

using the integral operator K defined by

$$K(\rho)(x) := \int_\Sigma \Lambda(x,y)\,\omega(x,y)\,\rho(y)\,\mathrm{d}y \quad (\text{a.e. } x \in \Sigma), \tag{2.8}$$

where the visibility factor $\Lambda(x,y)$ is 1 or 0, depending on the points x and y being mutually visible or not. The view factor ω is defined almost everywhere by

$$\omega(x,y) := \frac{\big(\mathbf{n}_{\mathrm{g}}(y)\bullet(x-y)\big)\,\big(\mathbf{n}_{\mathrm{g}}(x)\bullet(y-x)\big)}{\pi\big((y-x)\bullet(y-x)\big)^2} \quad \big(\text{a.e. } (x,y)\in\Sigma^2,\ x\neq y\big). \tag{2.9}$$

According to [Tii97b, Lem. 2], K is a positive compact operator from $L^p(\Sigma)$ into itself for each $p \in [1,\infty]$, and, since Σ forms an enclosure, $\|K\| = 1$. Moreover, for the closed surface Σ, the following holds (conservation of radiation energy, [Tii97a, Lem. 1]):

$$\int_\Sigma \Lambda(x,y)\,\omega(x,y)\,\mathrm{d}y \;=\; 1 \quad (\text{a.e. } x \in \Sigma). \tag{2.10}$$

Combining (2.4) through (2.7) provides the following nonlocal equation for the radiosity $R(\theta)$:

$$R(\theta) - \big(1-\epsilon(\theta)\big)\,K(R(\theta)) = \sigma\,\epsilon(\theta)\cdot\theta^4. \tag{2.11}$$

One can write (2.11) in the form

$$G_\theta(R(\theta)) = E(\theta), \tag{2.12}$$

where the operator G_θ is defined by

$$G_\theta(\rho) := \rho - \big(1-\epsilon(\theta)\big)\,K(\rho). \tag{2.13}$$

For the following Lem. 2.1, it is not necessary to assume any regularity of ϵ and θ:

Lemma 2.1. *If the functions $\epsilon : \mathbb{R}_0^+ \longrightarrow]0,1]$ and $\theta : \Sigma \longrightarrow \mathbb{R}_0^+$ are measurable, then, for each $p \in [1,\infty]$, the operator G_θ maps $L^p(\Sigma)$ into itself and has a positive inverse.*

Proof. Since the function $\epsilon \circ \theta$ is a measurable function with values in $]0,1]$, the lemma follows from [LT01, Lem. 2], where our $\epsilon\circ\theta$ plays the role of ϵ in [LT01, Lem. 2]. ■

Lemma 2.1 allows to state (2.12) as

$$R(\theta) = G_\theta^{-1}(E(\theta)). \tag{2.14}$$

From (2.11) and (2.7), it is

$$R(\theta) - J(\theta) = -\epsilon(\theta) \cdot \big(K(R(\theta)) - \sigma\,\theta^4\big), \tag{2.15}$$

such that (2.3) becomes

$$(\kappa_{\rm g}\,\nabla\theta)\restriction_{\overline{\Omega}_{\rm g}} \bullet \mathbf{n}_{\rm g} - \epsilon(\theta) \cdot \big(K(R(\theta)) - \sigma\,\theta^4\big) = (\kappa_{\rm s}\,\nabla\theta)\restriction_{\overline{\Omega}_{\rm s}} \bullet \mathbf{n}_{\rm g} \quad \text{on } \Sigma. \tag{2.16}$$

2.3 Nonlocal Outer Boundary Conditions

Definition 2.2. A family $(A_i)_{i\in I}$ of subsets of $\mathbb{R}^d$ is called a *partition* of $A \subseteq \mathbb{R}^d$ iff (with respect to the relative topology on A) $A = \bigcup_{i\in I}\overline{A_i}$ and $\operatorname{int} A_i \cap \operatorname{int} A_j = \emptyset$ for each $i \neq j$.

Thus, in the sense of Def. 2.2, $(\Omega_{\rm s}, \Omega_{\rm g})$ is a partition of $\overline{\Omega}$.

Definition and Remark 2.3. Let $\operatorname{conv}(\overline{\Omega})$ denote the closed convex hull of Ω, and define $O := \operatorname{int}(\operatorname{conv}(\overline{\Omega})) \setminus \overline{\Omega}$, $\Gamma_\Omega := \overline{\Omega} \cap \overline{O}$, $\Gamma := \partial O$, and $\Gamma_{\rm ph} := \partial\operatorname{conv}(\overline{\Omega}) \cap \partial O$. Then $(\Gamma_\Omega, \Gamma_{\rm ph})$ forms a partition of Γ. The set O is the domain of the open radiation region (e.g., one has $O = O_1 \cup O_2$ in Figures 1 and 2).

On the interface Γ_Ω between Ω and the open radiation region O, one has

$$\kappa_{\rm s}\,\nabla\theta \bullet \mathbf{n}_{\rm s} + R_\Gamma(\theta) - J_\Gamma(\theta) = 0 \quad \text{on } \Gamma_\Omega \tag{2.17}$$

in analogy with (2.3), where $\mathbf{n}_{\rm s}$ is the outer unit normal vector to the solid. To allow for radiative interactions between surfaces of open cavities and the ambient environment, including reflections at the cavity's surfaces, the set $\Gamma_{\rm ph}$ as defined above, is used as a black body phantom closure (see Fig. 2), emitting radiation at an external temperature $\theta_{\rm ext}$,

(A-7) $\theta_{\rm ext} \in \mathbb{R}_0^+$.

Thus, $\epsilon \equiv 1$ on $\Gamma_{\rm ph}$, leading to

$$R_\Gamma(\theta)(x) = \sigma\,\theta_{\rm ext}^4 \quad (x \in \Gamma_{\rm ph}). \tag{2.18}$$

Here and in the following, it is assumed that the apparatus is exposed to a black body environment (e.g. a large isothermal room) radiating at $\theta_{\rm ext}$. A relation analogous to (2.15) holds on Γ_Ω, and using it in (2.17) yields

$$\kappa_{\rm s}\,\nabla\theta \bullet \mathbf{n}_{\rm s} - \epsilon(\theta) \cdot \big(K_\Gamma(R_\Gamma(\theta)) - \sigma\,\theta^4\big) = 0 \quad \text{on } \Gamma_\Omega, \tag{2.19}$$

where K_Γ is defined analogous to K in (2.8), except that the integration is carried out over Γ instead of over Σ.

On parts of $\partial\Omega$ that do not interact radiatively with other parts of the apparatus, i.e. on $\partial\Omega \setminus \Gamma_\Omega$, the Stefan-Boltzmann law provides the outer boundary condition

$$\kappa_{\rm s}\,\nabla\theta \bullet \mathbf{n}_{\rm s} - \sigma\,\epsilon(\theta) \cdot (\theta_{\rm ext}^4 - \theta^4) = 0 \quad \text{on } \partial\Omega \setminus \Gamma_\Omega. \tag{2.20}$$

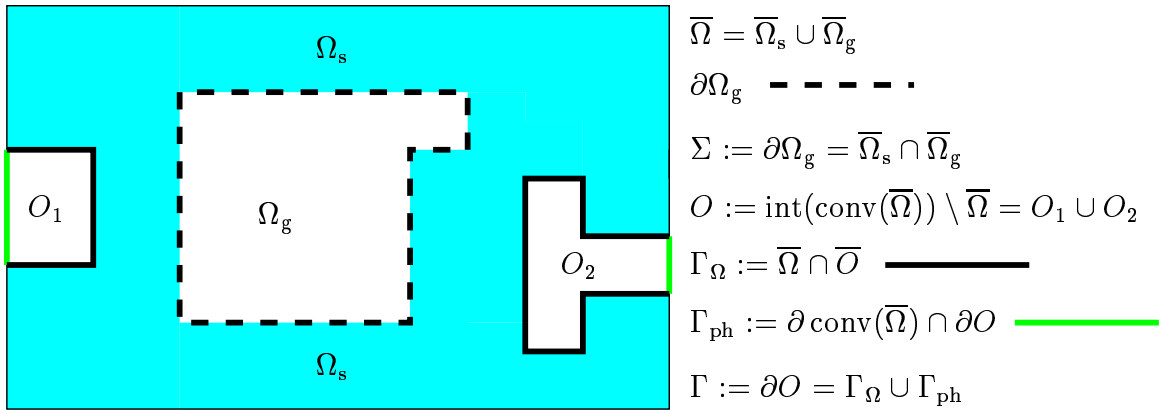

Figure 2: For the domain of Fig. 1, the surfaces of radiation regions are shown. The open radiation regions O_1 and O_2 are artificially closed by the phantom closure Γ_{ph}. As in Fig. 1, Fig. 2 depicts a 2-dimensional section through the 3-dimensional domain.

2.4 Initial Condition

The initial condition reads $\theta(0,x) = \theta_{\mathrm{init}}(x)$, $x \in \overline{\Omega}$, where it is assumed that

(A-8) $\theta_{\mathrm{init}} \in L^\infty(\overline{\Omega}, \mathbb{R}_0^+)$.

3 The Discrete Scheme

We assume (A-1) – (A-8) throughout this section.

3.1 Discretization of Time and Space Domain

A discretization of the time domain $[0,T]$ is given by an increasing finite sequence $0 = t_0 < \cdots < t_N = T$, $N \in \mathbb{N}$. The notation $k_\nu := t_\nu - t_{\nu-1}$ will be used for the time steps.

An admissible discretization of the space domain Ω is given by a finite family $\mathcal{T} := (\omega_i)_{i\in I}$ of subsets of Ω satisfying a number of assumptions, subseqently denoted by (DA-$*$).

(DA-1) $\mathcal{T} = (\omega_i)_{i\in I}$ forms a partition of Ω according to Def. 2.2, and, for each $i \in I$, ω_i is a nonvoid, polyhedral, connected, and open subset of Ω.

From $\mathcal{T}$, one can define discretizations of Ω_{s} and Ω_{g}: For $m \in \{\mathrm{s},\mathrm{g}\}$ and $i \in I$, let

$$\omega_{m,i} := \omega_i \cap \Omega_m, \quad I_m := \big\{j \in I : \omega_{m,j} \neq \emptyset\big\}, \quad \mathcal{T}_m := (\omega_{m,i})_{i\in I_m}. \tag{3.1}$$

To allow the incorporation of the interface condition (2.16) into the scheme (see (3.3a) and (3.7b) below), it is assumed that, if some $\overline{\omega}_i$ has a 2-dimensional intersection with the interface Σ, then it lies on both sides of the intersection. More precisely:

(DA-2) For each $i \in I$: $\partial_{\mathrm{reg}}\omega_{\mathrm{s},i} \cap \Sigma = \partial_{\mathrm{reg}}\omega_{\mathrm{g},i} \cap \Sigma$, where ∂_{reg} denotes the regular boundary of a polyhedral set, i.e. the parts of the boundary, where a unique outer unit normal vector exists (see Fig. 3), $\partial_{\mathrm{reg}}\emptyset := \emptyset$.

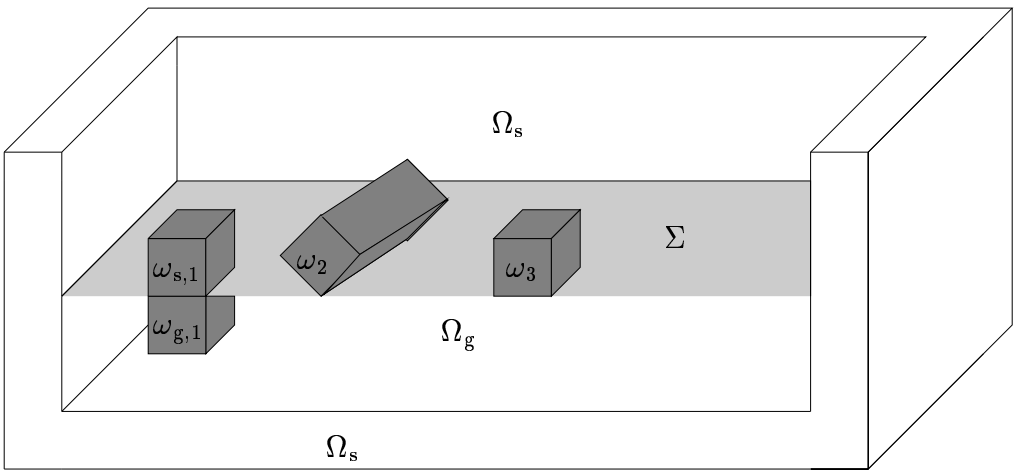

Figure 3: Illustration of condition (DA-2): Ω_{s} consists of the outer wall of the box as well as of the region above the gray horizontal plane, which is contained in Σ; Ω_{g} consists of the region below that plane and engulfed by the wall. Both ω_1 and ω_2 satisfy (DA-2) (where $\partial_{\mathrm{reg}}\omega_{\mathrm{s},2} \cap \Sigma = \emptyset = \omega_{\mathrm{g},2}$), however ω_3 does not satisfy (DA-2) ($\partial_{\mathrm{reg}}\omega_{\mathrm{s},3} \cap \Sigma \neq \emptyset = \omega_{\mathrm{g},3}$).

Integrating (2.1) over $[t_{\nu-1}, t_\nu] \times \omega_{m,i}$, applying the Gauss-Green integration theorem, and using implicit time discretization yields

$$k_\nu^{-1} \int_{\omega_{m,i}} \big(\varepsilon_m(\theta_\nu) - \varepsilon_m(\theta_{\nu-1})\big) - \int_{\partial\omega_{m,i}} \kappa_m \nabla \theta_\nu \bullet \mathbf{n}_{\omega_{m,i}} = k_\nu^{-1} \int_{t_{\nu-1}}^{t_\nu} \int_{\omega_{m,i}} f_m, \quad (3.2)$$

where $\theta_\nu := \theta(t_\nu, \cdot)$, and $\mathbf{n}_{\omega_{m,i}}$ denotes the outer unit normal vector to $\omega_{m,i}$.

The time discretization of the interface and boundary conditions (2.16), (2.19), and (2.20), respectively, is also done implicitly, except for the temperature dependence of the emissivity, which is discretized explicitly, thereby, e.g., substantially simplifying the use of Newton's method for the nonlinear solver. More precisely, the approximation $R(\theta_{\nu-1}, \theta_\nu)$ of the radiosity $R(\theta)$ is supposed to satisfy a discretized version of (2.11), where $\epsilon(\theta)$ is replaced by $\epsilon(\theta_{\nu-1})$, and θ^4 is replaced by θ_ν^4 (also cf. (3.15) below). Analogously, $R_\Gamma(\theta)$ is replaced by an approximation $R_\Gamma(\theta_{\nu-1}, \theta_\nu)$. The time discretizations of (2.16), (2.19), and (2.20) thus read

$$(\kappa_{\mathrm{g}} \nabla \theta_\nu)\restriction_{\overline{\Omega}_{\mathrm{g}}} \bullet \mathbf{n}_{\mathrm{g}} - \epsilon(\theta_{\nu-1}) \cdot \big(K(R(\theta_{\nu-1}, \theta_\nu)) - \sigma\, \theta_\nu^4\big) = (\kappa_{\mathrm{s}} \nabla \theta_\nu)\restriction_{\overline{\Omega}_{\mathrm{s}}} \bullet \mathbf{n}_{\mathrm{g}} \quad \text{on } \Sigma, \quad (3.3a)$$

$$\kappa_{\mathrm{s}} \nabla \theta_\nu \bullet \mathbf{n}_{\mathrm{s}} - \epsilon(\theta_{\nu-1}) \cdot \big(K_\Gamma(R_\Gamma(\theta_{\nu-1}, \theta_\nu)) - \sigma\, \theta_\nu^4\big) = 0 \quad \text{on } \Gamma_\Omega, \tag{3.3b}$$

and

$$\kappa_{\mathrm{s}} \nabla \theta_\nu \bullet \mathbf{n}_{\mathrm{s}} - \sigma\, \epsilon(\theta_{\nu-1}) \cdot (\theta_{\mathrm{ext}}^4 - \theta_\nu^4) = 0 \quad \text{on } \partial\Omega \setminus \Gamma_\Omega, \tag{3.3c}$$

respectively.

3.2 Approximation of Space Integrals, Interface and Boundary Conditions

The finite volume scheme is furnished by using the time-discrete interface and boundary conditions (3.3) in (3.2) and by approximating integrals by quadrature formulas. To approximate θ_ν by a finite number of discrete unknowns $\theta_{\nu,i}$, $i \in I$, precisely one value $\theta_{\nu,i}$ is associated with each control volume ω_i. Introducing a discretization point $x_i \in \omega_i$ for each control volume ω_i, the $\theta_{\nu,i}$ can be interpreted as $\theta_\nu(x_i)$ (cf. [FL01]). Moreover, the discretization makes use of regularity assumptions concerning the partition $(\omega_i)_{i\in I}$ that can be expressed in terms of the x_i (see (DA-3), (DA-4), and (DA-5) below).

The first integral in (3.2) is approximated by

$$\int_{\omega_{m,i}} \big(\varepsilon_m(\theta_\nu) - \varepsilon_m(\theta_{\nu-1})\big) \approx \big(\varepsilon_m(\theta_{\nu,i}) - \varepsilon_m(\theta_{\nu-1,i})\big) \cdot \lambda_3(\omega_{m,i}), \tag{3.4}$$

where, here and in the following, λ_d, $d \in \{2,3\}$, denotes d-dimensional Lebesgue measure. Approximation (3.4) is exact if θ_ν and $\theta_{\nu-1}$ are constant inside $\omega_{m,i}$.

The boundary of each control volume $\omega_{m,i}$ can be decomposed according to (see Fig. 4)

$$\partial\omega_{m,i} = \big(\partial\omega_{m,i} \cap \Omega_m\big) \;\cup\; \big(\partial\omega_{m,i} \cap \partial\Omega\big) \;\cup\; \big(\partial\omega_{m,i} \cap \Sigma\big). \tag{3.5a}$$

Recalling (A-1), (A-2), and Def. and Rem. 2.3, outer boundary sets are decomposed further into

$$\partial\omega_{\mathrm{s},i} \cap \partial\Omega = \big(\partial\omega_{\mathrm{s},i} \cap \Gamma_\Omega\big) \cup \big(\partial\omega_{\mathrm{s},i} \cap (\partial\Omega \setminus \Gamma_\Omega)\big), \tag{3.5b}$$

whereas $\partial\omega_{\mathrm{g},i} \cap \partial\Omega = \emptyset$.

To guarantee that there is a discretization point x_i in each of the integration domains occurring in (3.5), it is assumed that the discretization $\mathcal{T}$ respects interfaces and outer boundaries in the following sense:

(DA-3) For each $m \in \{\mathrm{s}, \mathrm{g}\}$, $i \in I_m$: $x_i \in \overline{\omega}_{m,i}$. In particular, if $\omega_{\mathrm{s},i} \neq \emptyset$ and $\omega_{\mathrm{g},i} \neq \emptyset$, then $x_i \in \overline{\omega}_{\mathrm{s},i} \cap \overline{\omega}_{\mathrm{g},i}$.

(DA-4) For each $i \in I$, the following holds: If $\lambda_2(\overline{\omega}_i \cap \Gamma_\Omega) \neq 0$, then $x_i \in \overline{\omega}_i \cap \Gamma_\Omega$; and, if $\lambda_2\big(\overline{\omega}_i \cap (\partial\Omega \setminus \Gamma_\Omega)\big) \neq 0$, then $x_i \in \overline{\omega}_i \cap \overline{\partial\Omega \setminus \Gamma_\Omega}$ (cf. Fig. 5).

Remark 3.1. Suppose a control volume $\overline{\omega}_i$ has a 2-dimensional intersection with both $\partial\Omega$ and Σ. Then, by (DA-2), $\omega_{\mathrm{s},i} \neq \emptyset$ and $\omega_{\mathrm{g},i} \neq \emptyset$. Thus, by (DA-3), $x_i \in \Sigma$.

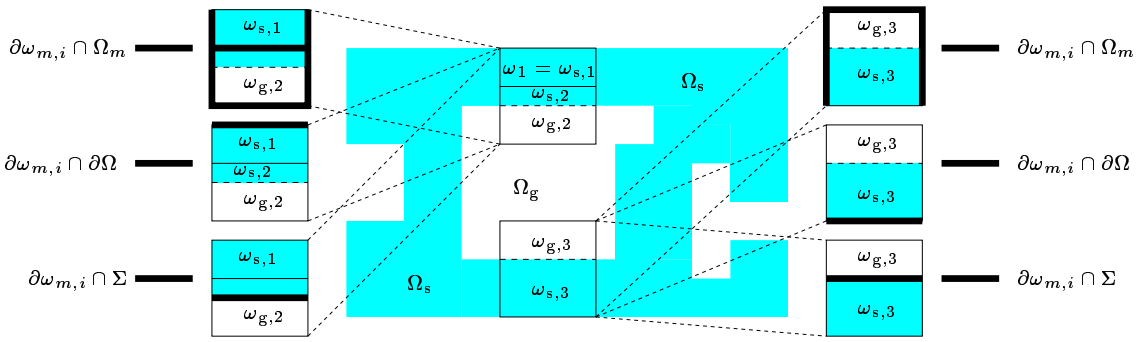

Figure 4: Illustration of the decomposition of the boundary of control volumes $\omega_{m,i}$ according to (3.5a). The lower control volume ω_3 is not admissible, as it has 2-dimensional intersections with both Σ and $\partial\Omega$ (see Rem. 3.1).

On the other hand, by (DA-4), $x_i \in \partial\Omega$, which means that (A-2) is violated. It is thus shown that $\overline{\omega}_i$ can *not* have 2-dimensional intersections with both $\partial\Omega$ and Σ. In particular, the lower control volume ω_3 in Fig. 4 is not admissible.

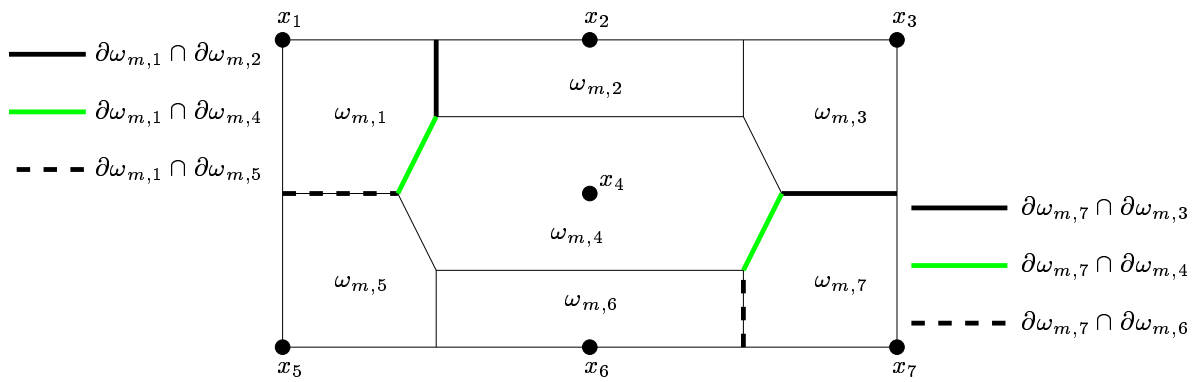

Figure 5: Illustration of conditions (DA-4) (with $\Gamma_\Omega = \emptyset$) and (DA-5) as well as of the partition of $\partial\omega_{m,i} \cap \Omega_m$ according to (3.8). One has $\mathrm{nb}_m(1) = \{2, 4, 5\}$ and $\mathrm{nb}_m(7) = \{3, 4, 6\}$.

Using the boundary condition (3.3c) leads to the following approximation:

$$-\int_{\partial\omega_{\mathrm{s},i}\cap(\partial\Omega\setminus\Gamma_\Omega)} \kappa_{\mathrm{s}}\, \nabla\theta_\nu \bullet \mathbf{n}_{\omega_{\mathrm{s},i}} \approx -\sigma\, \epsilon(\theta_{\nu-1,i}) \cdot (\theta_{\mathrm{ext}}^4 - \theta_{\nu,i}^4) \cdot \lambda_2\big(\partial\omega_{\mathrm{s},i} \cap (\partial\Omega\setminus\Gamma_\Omega)\big). \quad (3.6)$$

The nonlocal boundary condition (3.3b) and the nonlocal interface condition (3.3a) yield

$$-\int_{\partial\omega_{\mathrm{s},i}\cap\Gamma_\Omega} \kappa_{\mathrm{s}}\, \nabla\theta_\nu \bullet \mathbf{n}_{\omega_{\mathrm{s},i}} = -\int_{\partial\omega_{\mathrm{s},i}\cap\Gamma_\Omega} \epsilon(\theta_{\nu-1}) \cdot \big(K_\Gamma(R_\Gamma(\theta_{\nu-1}, \theta_\nu)) - \sigma\, \theta_\nu^4\big). \quad (3.7a)$$

and

$$-\sum_{m\in\{\mathrm{s},\mathrm{g}\}} \int_{\partial\omega_{m,i}\cap\Sigma} \kappa_m\, \nabla\theta_\nu \bullet \mathbf{n}_{\omega_{m,i}} = -\int_{\omega_i\cap\Sigma} \epsilon(\theta_{\nu-1}) \cdot \big(K(R(\theta_{\nu-1}, \theta_\nu)) - \sigma\, \theta_\nu^4\big), \quad (3.7b)$$

respectively. However, the approximation of the nonlocal terms $K_\Gamma(R_\Gamma(\theta_{\nu-1},\theta_\nu))$ and $K(R(\theta_{\nu-1},\theta_\nu))$ is more involved and is the subject of Sec. 3.3 below.

To approximate the integrals over $\partial\omega_{m,i}\cap\Omega_m$, this set is partitioned further (see Fig. 5):

$$\partial\omega_{m,i}\cap\Omega_m = \bigcup_{j\in\mathrm{nb}_m(i)} \partial\omega_{m,i}\cap\partial\omega_{m,j}, \tag{3.8}$$

where $\mathrm{nb}_m(i) := \{j\in I_m\setminus\{i\} : \lambda_2(\partial\omega_{m,i}\cap\partial\omega_{m,j})\neq 0\}$ is the set of m-neighbors of i. Moreover, it is assumed that:

(DA-5) For each $i\in I$, $j\in\mathrm{nb}(i) := \{j\in I\setminus\{i\} : \lambda_2(\partial\omega_i\cap\partial\omega_j)\neq 0\}$: $x_i\neq x_j$ and $\frac{x_j-x_i}{\|x_i-x_j\|_2} = \mathbf{n}_{\omega_i}\restriction_{\partial\omega_i\cap\partial\omega_j}$, where $\|\cdot\|_2$ denotes Euclidian distance, and $\mathbf{n}_{\omega_i}\restriction_{\partial\omega_i\cap\partial\omega_j}$ is the restriction of the normal vector $\mathbf{n}_{\omega_i}$ to the interface $\partial\omega_i\cap\partial\omega_j$. Thus, the line segment joining neighboring vertices x_i and x_j is always perpendicular to $\partial\omega_i\cap\partial\omega_j$ (see Fig. 5, where the vertices x_i are chosen such that (DA-5) is satisfied).

The approximation of the integrals over $\partial\omega_{m,i}\cap\Omega_m$, is now provided by replacing the normal gradient of θ_ν on $\partial\omega_i\cap\partial\omega_j$ by the corresponding difference quotient

$$\int_{\partial\omega_{m,i}\cap\Omega_m} \nabla\theta_\nu\bullet\mathbf{n}_{\omega_{m,i}} \approx \sum_{j\in\mathrm{nb}_m(i)} \frac{\theta_{\nu,j}-\theta_{\nu,i}}{\|x_i-x_j\|_2}\cdot\lambda_2\big(\partial\omega_{m,i}\cap\partial\omega_{m,j}\big). \tag{3.9}$$

Approximation (3.9) is exact if θ_ν is linear on the line segment connecting x_i and x_j.

We now come to the discretization of the nonlocal terms. The approximation of the source term then follows in Sec. 3.4 below.

3.3 Discretization of Nonlocal Radiation Terms

Similarly to the finite volume approximation of the local terms, the discretization of $K_\Gamma(R_\Gamma(\theta_{\nu-1},\theta_\nu))$ and $K(R(\theta_{\nu-1},\theta_\nu))$ proceeds by partitioning the surface of the respective radiation region (i.e. Γ for $K_\Gamma(R_\Gamma(\theta_{\nu-1},\theta_\nu))$ and Σ for $K(R(\theta_{\nu-1},\theta_\nu))$) into 2-dimensional polyhedral control volumes (so-called boundary elements).

(DA-6) For a chosen fixed index "ph", $(\zeta_\alpha)_{\alpha\in I_\Omega}$ and $(\zeta_\alpha)_{\alpha\in I_\Sigma}$ are finite partitions (see Def. 2.2) of Γ_Ω and Σ, respectively, where

$$I_\Omega\cap I_\Sigma=\emptyset, \qquad \mathrm{ph}\notin I_\Omega\cup I_\Sigma, \tag{3.10}$$

and, for each $\alpha\in I_\Omega$ (resp. $\alpha\in I_\Sigma$), the boundary element ζ_α is a nonvoid, polyhedral, connected, and (relative) open subset of Γ_Ω (resp. Σ), lying in a 2-dimensional affine subspace of $\mathbb{R}^3$. For the convenience of subsequent concise notation, let $\zeta_{\mathrm{ph}} := \Gamma_{\mathrm{ph}}$ and $I_\Gamma := I_\Omega\,\dot\cup\,\{\mathrm{ph}\}$.

On both Γ_Ω and Σ, the boundary elements are supposed to be compatible with the control volumes ω_i:

(DA-7) For each $\alpha \in I_\Omega$ (resp. $\alpha \in I_\Sigma$), there is a unique $i(\alpha) \in I$ such that $\zeta_\alpha \subseteq \partial\omega_{i(\alpha)} \cap \Gamma_\Omega$ (resp. $\zeta_\alpha \subseteq \partial\omega_{\mathrm{s},i(\alpha)} \cap \Gamma_\Sigma$). Moreover, for each $\alpha \in I_\Omega \dot\cup I_\Sigma$: $x_{i(\alpha)} \in \overline{\zeta}_\alpha$ (s. Fig. 6).

Definition and Remark 3.2. For each $i \in I$, define $J_{\Omega,i} := \{\alpha \in I_\Omega : \lambda_2(\zeta_\alpha \cap \partial\omega_i) \neq 0\}$ and $J_{\Sigma,i} := \{\alpha \in I_\Sigma : \lambda_2(\zeta_\alpha \cap \partial\omega_{\mathrm{s},i}) \neq 0\}$. It then follows from (DA-1), (DA-6), and (DA-7), that $(\zeta_\alpha \cap \partial\omega_i)_{\alpha\in J_{\Omega,i}}$ is a partition of $\partial\omega_i \cap \Gamma_\Omega = \partial\omega_{\mathrm{s},i} \cap \Gamma_\Omega$ and that $(\zeta_\alpha \cap \partial\omega_{\mathrm{s},i})_{\alpha\in J_{\Sigma,i}}$ is a partition of $\partial\omega_{\mathrm{s},i} \cap \Sigma = \overline{\omega}_i \cap \Sigma$ (s. Fig. 6). Moreover, (A-2) implies that at most one of the two sets $J_{\Omega,i}$, $J_{\Sigma,i}$ can be nonvoid (cf. Rem. 3.1 above).

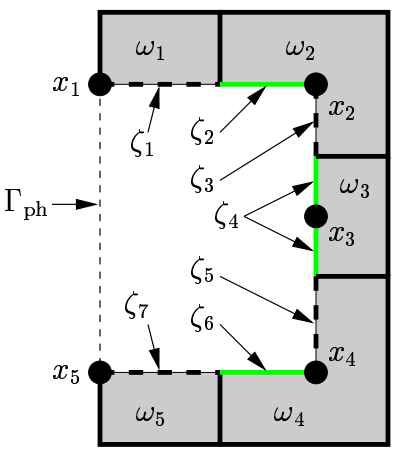

$i(1) = 1,\ i(2) = i(3) = 2,$
$i(4) = 3,\ i(5) = i(6) = 4,\ i(7) = 5$

$J_{\Omega,1} = \{1\},\ J_{\Omega,2} = \{2,3\},$
$J_{\Omega,3} = \{4\},\ J_{\Omega,4} = \{5,6\},\ J_{\Omega,5} = \{7\}$

Figure 6: Magnification of the open radiation region O_1 and of the adjacent part of Ω_{s} (cf. Figures 1, 2). It illustrates the partitioning of Γ_Ω into the ζ_α. In particular, it illustrates the compatibility condition (DA-7) as well as Def. and Rem. 3.2.

In the following, the discretization of $K_\Gamma(R_\Gamma(\theta_{\nu-1},\theta_\nu))$ is considered. The procedure is analogous for $K(R(\theta_{\nu-1},\theta_\nu))$, except slightly simpler, since it does not involve the phantom closure Γ_{ph}.

The radiosity $R_\Gamma(\theta_{\nu-1},\theta_\nu)$ is approximated as constant on each boundary element ζ_α, $\alpha \in I_\Omega$. The approximated value is denoted by $R_\alpha(\mathbf{u}_{\nu-1},\mathbf{u}_\nu)$, depending on the vectors $\mathbf{u}_{\nu-1} := (\theta_{\nu-1,i(\beta)})_{\beta\in I_\Omega}$, $\mathbf{u}_\nu := (\theta_{\nu,i(\beta)})_{\beta\in I_\Omega}$. On Γ_{ph}, $R_\Gamma(\theta) = \sigma\,\theta_{\mathrm{ext}}^4$ by (2.18). Therefore, the K_Γ-analogues of (2.7) and (2.8) yield

$$\int_{\zeta_\alpha} K_\Gamma(R_\Gamma(\theta_{\nu-1},\theta_\nu)) \approx \sum_{\beta\in I_\Omega} R_\beta(\mathbf{u}_{\nu-1},\mathbf{u}_\nu)\,\Lambda_{\alpha,\beta} + \sigma\,\theta_{\mathrm{ext}}^4\,\Lambda_{\alpha,\mathrm{ph}} \qquad (\alpha \in I_\Omega), \tag{3.11}$$

where

$$\Lambda_{\alpha,\beta} := \int_{\zeta_\alpha\times\zeta_\beta} \Lambda\,\omega \qquad \big((\alpha,\beta) \in I_\Gamma \times I_\Gamma\big). \tag{3.12}$$

Remark 3.3. Since points on the same boundary element ζ_α can never see each other, Λ vanishes on $\zeta_\alpha \times \zeta_\alpha$, such that $\Lambda_{\alpha,\alpha} = 0$. However, this fact will not be exploited in the following since we want to present the theory in a way that translates directly to the axisymmetric case, where, in general, $\Lambda_{\alpha,\alpha} > 0$ (cf. Sec. 3.6 below).

The $\Lambda_{\alpha,\beta}$ are nonnegative since $\Lambda\omega$ is nonnegative ([Tii97b, Lem. 2]). The forms of Λ and ω imply the symmetry condition

$$\Lambda_{\alpha,\beta} = \Lambda_{\beta,\alpha} \qquad \big((\alpha,\beta) \in I_\Gamma \times I_\Gamma\big). \tag{3.13}$$

Since $\Gamma = \Gamma_\Omega \cup \Gamma_{\mathrm{ph}}$ is a closed surface, the conservation of radiation energy (2.10) yields

$$\sum_{\beta \in I_\Gamma} \Lambda_{\alpha,\beta} = \lambda_2(\zeta_\alpha) \qquad (\alpha \in I_\Omega). \tag{3.14}$$

Using (3.11) allows to write (2.11) in the integrated and discretized form

$$\begin{aligned} &R_\alpha(\mathbf{u}_{\nu-1}, \mathbf{u}_\nu)\, \lambda_2(\zeta_\alpha) - \big(1 - \epsilon(\theta_{\nu-1,i(\alpha)})\big) \sum_{\beta \in I_\Omega} R_\beta(\mathbf{u}_{\nu-1}, \mathbf{u}_\nu)\, \Lambda_{\alpha,\beta} \\ &= \sigma\, \epsilon(\theta_{\nu-1,i(\alpha)})\, \theta^4_{\nu,i(\alpha)}\, \lambda_2(\zeta_\alpha) + \sigma \left(1 - \epsilon(\theta_{\nu-1,i(\alpha)})\right) \theta^4_{\mathrm{ext}}\, \Lambda_{\alpha,\mathrm{ph}} \end{aligned} \qquad (\alpha \in I_\Omega). \tag{3.15}$$

If the vectors $\mathbf{u}_{\nu-1} = (\theta_{\nu-1,i(\alpha)})_{\alpha \in I_\Omega}$ and $\mathbf{u}_\nu = (\theta_{\nu,i(\alpha)})_{\alpha \in I_\Omega}$ are known, then (3.15) constitutes a linear system for the determination of the vector $(R_\alpha(\mathbf{u}_{\nu-1}, \mathbf{u}_\nu))_{\alpha \in I_\Omega}$.

In matrix form, (3.15) reads

$$\mathbf{G}(\mathbf{u}_{\nu-1})\, \mathbf{R}(\mathbf{u}_{\nu-1}, \mathbf{u}_\nu) = \mathbf{E}(\mathbf{u}_{\nu-1}, \mathbf{u}_\nu) + \mathbf{E}_{\mathrm{ph}}(\mathbf{u}_{\nu-1}), \tag{3.16}$$

with vector-valued functions

$$\mathbf{R} : (\mathbb{R}_0^+)^{I_\Omega} \times (\mathbb{R}_0^+)^{I_\Omega} \longrightarrow (\mathbb{R}_0^+)^{I_\Omega}, \qquad \mathbf{R}(\tilde{\mathbf{u}}, \mathbf{u}) = \big(R_\alpha(\tilde{\mathbf{u}}, \mathbf{u})\big)_{\alpha \in I_\Omega}, \tag{3.17a}$$

$$\begin{aligned} \mathbf{E} : (\mathbb{R}_0^+)^{I_\Omega} \times (\mathbb{R}_0^+)^{I_\Omega} \longrightarrow (\mathbb{R}_0^+)^{I_\Omega}, \qquad & \mathbf{E}(\tilde{\mathbf{u}}, \mathbf{u}) = \big(E_\alpha(\tilde{\mathbf{u}}, \mathbf{u})\big)_{\alpha \in I_\Omega}, \\ & E_\alpha(\tilde{\mathbf{u}}, \mathbf{u}) := \sigma\, \epsilon(\tilde{u}_\alpha)\, u_\alpha^4\, \lambda_2(\zeta_\alpha), \end{aligned} \tag{3.17b}$$

$$\begin{aligned} \mathbf{E}_{\mathrm{ph}} : (\mathbb{R}_0^+)^{I_\Omega} \longrightarrow (\mathbb{R}_0^+)^{I_\Omega}, \qquad & \mathbf{E}_{\mathrm{ph}}(\tilde{\mathbf{u}}) = \big(E_{\mathrm{ph},\alpha}(\tilde{\mathbf{u}})\big)_{\alpha \in I_\Omega}, \\ & E_{\mathrm{ph},\alpha}(\tilde{\mathbf{u}}) := \sigma \left(1 - \epsilon(\tilde{u}_\alpha)\right) \theta^4_{\mathrm{ext}}\, \Lambda_{\alpha,\mathrm{ph}}, \end{aligned} \tag{3.17c}$$

($\mathbf{R}$ is indeed nonnegative, see (3.18) and the proof of Lem. 3.7(a) below), and a matrix-valued function

$$\begin{aligned} \mathbf{G} : (\mathbb{R}_0^+)^{I_\Omega} \longrightarrow \mathbb{R}^{I_\Omega^2}, \qquad & \mathbf{G}(\tilde{\mathbf{u}}) = \big(G_{\alpha,\beta}(\tilde{\mathbf{u}})\big)_{(\alpha,\beta) \in I_\Omega^2}, \\ & G_{\alpha,\beta}(\tilde{\mathbf{u}}) := \begin{cases} \lambda_2(\zeta_\alpha) - \big(1 - \epsilon(\tilde{u}_\alpha)\big) \cdot \Lambda_{\alpha,\beta} & \text{for } \alpha = \beta, \\ \qquad\quad - \big(1 - \epsilon(\tilde{u}_\alpha)\big) \cdot \Lambda_{\alpha,\beta} & \text{for } \alpha \neq \beta. \end{cases} \end{aligned} \tag{3.17d}$$

Lemma 3.4. *The following holds for each* $\mathbf{u} \in (\mathbb{R}_0^+)^{I_\Omega}$*:*

(a) *For each* $\alpha \in I_\Omega$*:* $\sum_{\beta\in I_\Omega\setminus\{\alpha\}} |G_{\alpha,\beta}(\mathbf{u})| \le (1-\epsilon(u_\alpha))\, G_{\alpha,\alpha}(\mathbf{u}) < G_{\alpha,\alpha}(\mathbf{u})$*. In particular,* $\mathbf{G}(\mathbf{u})$ *is strictly diagonally dominant.*

(b) $\mathbf{G}(\mathbf{u})$ *is an M-matrix, i.e.* $\mathbf{G}(\mathbf{u})$ *is invertible,* $\mathbf{G}^{-1}(\mathbf{u})$ *is nonnegative, and* $G_{\alpha,\beta}(\mathbf{u}) \le 0$ *for each* $(\alpha,\beta) \in I_\Omega^2$*,* $\alpha \ne \beta$*.*

Proof. (a): Combining (3.17d) with (3.14) yields

$$\begin{aligned}\sum_{\beta\in I_\Omega\setminus\{\alpha\}} |G_{\alpha,\beta}(\mathbf{u})| &\le \sum_{\beta\in I_\Gamma\setminus\{\alpha\}} \big(1-\epsilon(u_\alpha)\big)\,\Lambda_{\alpha,\beta} \\ &= \big(1-\epsilon(u_\alpha)\big)\,\big(\lambda_2(\zeta_\alpha) - \Lambda_{\alpha,\alpha}\big) \qquad (\alpha \in I_\Omega),\end{aligned}$$

proving (a) since $\epsilon > 0$.

(b): According to (3.17d), the nonnegativity of the $\Lambda_{\alpha,\beta}$ yields that $G_{\alpha,\beta}(\mathbf{u}) \le 0$ for $\alpha \ne \beta$, whereas (a) shows that $G_{\alpha,\alpha}(\mathbf{u}) > 0$. Since $\mathbf{G}(\mathbf{u})$ is also strictly diagonally dominant according to (a), $\mathbf{G}(\mathbf{u})$ is an M-matrix by [Axe94, Lem. 6.2]. ■

Remark 3.5. If one were to relax (A-6) to allow $\epsilon(\theta) = 0$, thereby admitting completely reflecting and not emitting parts of the surface, then one could no longer expect $\mathbf{G}(\mathbf{u})$ to be strictly diagonally dominant. However, as long as there is no connected radiation region where ϵ vanishes identically, $\mathbf{G}(\mathbf{u})$ is still *weakly* diagonally dominant, and one can still prove Lem. 3.4(b) using [Col68, §23, Th. 2]. In consequence, the subsequent development can still be carried out and Lem. 3.7 can still be proved. If ϵ did vanish identically within some connected radiation region, then, on the region's surface, one had to remove R and J from the corresponding interface condition.

Now, Lemma 3.4(b) allows to give a precise definition of $\mathbf{R}$ by completing (3.17a) with

$$\mathbf{R}(\tilde{\mathbf{u}},\mathbf{u}) := \mathbf{G}^{-1}(\tilde{\mathbf{u}})\,\big(\mathbf{E}(\tilde{\mathbf{u}},\mathbf{u}) + \mathbf{E}_{\mathrm{ph}}(\tilde{\mathbf{u}})\big). \tag{3.18}$$

Remark 3.6. The definition of $\mathbf{R}$ in (3.18) implies that (3.15) and (3.16) hold with $\mathbf{u}_{\nu-1} = (\theta_{\nu-1,i(\alpha)})_{\alpha\in I_\Omega}$ and $\mathbf{u}_\nu = (\theta_{\nu,i(\alpha)})_{\alpha\in I_\Omega}$ replaced by general vectors $\tilde{\mathbf{u}} = (\tilde{u}_\alpha)_{\alpha\in I_\Omega} \in (\mathbb{R}_0^+)^{I_\Omega}$ and $\mathbf{u} = (u_\alpha)_{\alpha\in I_\Omega} \in (\mathbb{R}_0^+)^{I_\Omega}$, respectively.

Finally, introducing the vector-valued function

$$\begin{aligned}&\mathbf{V}_\Gamma : (\mathbb{R}_0^+)^{I_\Omega} \times (\mathbb{R}_0^+)^{I_\Omega} \longrightarrow (\mathbb{R}_0^+)^{I_\Omega}, \qquad \mathbf{V}_\Gamma(\tilde{\mathbf{u}},\mathbf{u}) = \big(V_{\Gamma,\alpha}(\tilde{\mathbf{u}},\mathbf{u})\big)_{\alpha\in I_\Omega}, \\ &V_{\Gamma,\alpha}(\tilde{\mathbf{u}},\mathbf{u}) := \epsilon(\tilde{u}_\alpha) \sum_{\beta\in I_\Omega} R_\beta(\tilde{\mathbf{u}},\mathbf{u})\,\Lambda_{\alpha,\beta} + \sigma\,\epsilon(\tilde{u}_\alpha)\,\theta_{\mathrm{ext}}^4\,\Lambda_{\alpha,\mathrm{ph}},\end{aligned} \tag{3.19}$$

(3.11) provides the desired approximation of the nonlocal term in (3.7a):

$$\begin{aligned}&\epsilon(\theta_{\nu-1}) \int_{\zeta_\alpha} K_\Gamma(R_\Gamma(\theta_{\nu-1},\theta_\nu)) \\ &\approx \epsilon(\theta_{\nu-1,i(\alpha)}) \sum_{\beta\in I_\Omega} R_\beta(\mathbf{u}_{\nu-1},\mathbf{u}_\nu)\,\Lambda_{\alpha,\beta} + \sigma\,\epsilon(\theta_{\nu-1,i(\alpha)})\,\theta_{\mathrm{ext}}^4\,\Lambda_{\alpha,\mathrm{ph}} = V_{\Gamma,\alpha}(\mathbf{u}_{\nu-1},\mathbf{u}_\nu).\end{aligned} \tag{3.20}$$

Working with the partition $(\zeta_\alpha)_{\alpha\in I_\Sigma}$ of Σ, a procedure analogous to the one described above (where Σ plays the role of Γ_Ω, and $\Gamma_{\rm ph}=\emptyset$) leads to the definition of a vector-valued function $\mathbf{V}_\Sigma : (\mathbb{R}_0^+)^{I_\Sigma}\times(\mathbb{R}_0^+)^{I_\Sigma}\longrightarrow(\mathbb{R}_0^+)^{I_\Sigma}$, $\mathbf{V}_\Sigma(\tilde{\mathbf{u}},\mathbf{u}) = \big(V_{\Sigma,\alpha}(\tilde{\mathbf{u}},\mathbf{u})\big)_{\alpha\in I_\Sigma}$, providing the approximation of the nonlocal term in (3.7b):

$$\epsilon(\theta_{\nu-1})\int_{\zeta_\alpha} K(R(\theta_{\nu-1},\theta_\nu)) \approx \epsilon(\theta_{\nu-1,i(\alpha)})\sum_{\beta\in I_\Sigma} R_\beta(\mathbf{u}_{\nu-1},\mathbf{u}_\nu)\,\Lambda_{\alpha,\beta} = V_{\Sigma,\alpha}(\mathbf{u}_{\nu-1},\mathbf{u}_\nu). \tag{3.21}$$

For subsequent use, the following Lem. 3.7 states some properties of the functions $\mathbf{V}_\Gamma$ and $\mathbf{V}_\Sigma$. We introduce the following notation for $\mathbf{u}=(u_i)_{i\in I}\in\mathbb{R}^I$ (where I can be an arbitrary, nonempty, finite index set):

$$\min(\mathbf{u}) := \min\{u_i : i\in I\},\quad \max(\mathbf{u}) := \max\{u_i : i\in I\}. \tag{3.22}$$

Lemma 3.7. (a) *Both $\mathbf{V}_\Gamma$ and $\mathbf{V}_\Sigma$ are nonnegative.*

(b) *For each $(\tilde{\mathbf{u}},\mathbf{u})\in(\mathbb{R}_0^+)^{I_\Omega}\times(\mathbb{R}_0^+)^{I_\Omega}$, $\alpha\in I_\Omega$:*

$$\begin{aligned}\sigma\,\epsilon(\tilde u_\alpha)\,\min\big\{\min(\mathbf{u})^4,\theta_{\rm ext}^4\big\}\,\lambda_2(\zeta_\alpha) &\le V_{\Gamma,\alpha}(\tilde{\mathbf{u}},\mathbf{u})\\ &\le \sigma\,\epsilon(\tilde u_\alpha)\,\max\big\{\max(\mathbf{u})^4,\theta_{\rm ext}^4\big\}\,\lambda_2(\zeta_\alpha),\end{aligned}$$

and, for each $(\tilde{\mathbf{u}},\mathbf{u})\in(\mathbb{R}_0^+)^{I_\Sigma}\times(\mathbb{R}_0^+)^{I_\Sigma}$, $\alpha\in I_\Sigma$:

$$\sigma\,\epsilon(\tilde u_\alpha)\,\min(\mathbf{u})^4 \le V_{\Sigma,\alpha}(\tilde{\mathbf{u}},\mathbf{u}) \le \sigma\,\epsilon(\tilde u_\alpha)\,\max(\mathbf{u})^4\;\lambda_2(\zeta_\alpha).$$

(c) *For each $r\in\mathbb{R}^+$ and $\tilde{\mathbf{u}}\in(\mathbb{R}_0^+)^{I_\Omega}$, with respect to the max-norm, the map $V_{\Gamma,\alpha}(\tilde{\mathbf{u}},\cdot)$ is $\big(4\,\sigma\,\epsilon(\tilde u_\alpha)\,(\lambda_2(\zeta_\alpha)-\Lambda_{\alpha,\rm ph})\,r^3\big)$-Lipschitz on $[0,r]^{I_\Omega}$.*

Analogously, for each $r\in\mathbb{R}^+$ and $\tilde{\mathbf{u}}\in(\mathbb{R}_0^+)^{I_\Sigma}$, with respect to the max-norm, the map $V_{\Sigma,\alpha}(\tilde{\mathbf{u}},\cdot)$ is $\big(4\,\sigma\,\epsilon(\tilde u_\alpha)\,\lambda_2(\zeta_\alpha)\,r^3\big)$-Lipschitz on $[0,r]^{I_\Sigma}$.

Proof. (a): Since $0<\epsilon\le 1$, $\mathbf{E}$ and $\mathbf{E}_{\rm ph}$ are nonnegative by (3.17b) and (3.17c), respectively. Then $\mathbf{R}$ is nonnegative according to (3.18) and Lem. 3.4(b). The nonnegativity of $\mathbf{V}_\Gamma$ is now a direct consequence of (3.19). An analogous argument shows $\mathbf{V}_\Sigma\ge 0$.

(b): Note that, since $\mathbf{R}(\tilde{\mathbf{u}},\mathbf{u})$ satisfies (3.15) by Rem. 3.6, one has

$$\begin{aligned}&R_\alpha(\tilde{\mathbf{u}},\mathbf{u})\,\lambda_2(\zeta_\alpha) - \big(1-\epsilon(\tilde u_\alpha)\big)\sum_{\beta\in I_\Omega} R_\beta(\tilde{\mathbf{u}},\mathbf{u})\,\Lambda_{\alpha,\beta}\\ &\le \sigma\,\max\big\{\max(\mathbf{u})^4,\theta_{\rm ext}^4\big\}\Big(\epsilon(\tilde u_\alpha)\,\lambda_2(\zeta_\alpha) + \big(1-\epsilon(\tilde u_\alpha)\big)\,\Lambda_{\alpha,\rm ph}\Big) \qquad (\alpha\in I_\Omega),\\ &= \sigma\,\max\big\{\max(\mathbf{u})^4,\theta_{\rm ext}^4\big\}\Big(\lambda_2(\zeta_\alpha) - \big(1-\epsilon(\tilde u_\alpha)\big)\sum_{\beta\in I_\Omega}\Lambda_{\alpha,\beta}\Big)\end{aligned} \tag{3.23}$$

i.e. $\mathbf{G}(\tilde{\mathbf{u}})\,\mathbf{R}(\tilde{\mathbf{u}},\mathbf{u}) \le \mathbf{G}(\tilde{\mathbf{u}})\,\mathbf{U}_{\max}$, where

$$\mathbf{U}_{\max} = (U_{\max,\alpha})_{\alpha\in I_\Omega},\quad U_{\max,\alpha} := \sigma\,\max\big\{\max(\mathbf{u})^4,\theta_{\rm ext}^4\big\},$$

implying $\mathbf{R}(\tilde{\mathbf{u}},\mathbf{u}) \leq \mathbf{U}_{\max}$, as $\mathbf{G}^{-1}(\tilde{\mathbf{u}}) \geq 0$ by Lem. 3.4(b). Thus, $R_\alpha(\tilde{\mathbf{u}},\mathbf{u}) \leq \sigma \max\left\{\max(\mathbf{u})^4, \theta_{\text{ext}}^4\right\}$ for each $\alpha \in I_\Omega$. Likewise, one obtains that $R_\alpha(\tilde{\mathbf{u}},\mathbf{u}) \geq \sigma \min\left\{\min(\mathbf{u})^4, \theta_{\text{ext}}^4\right\}$ for each $\alpha \in I_\Omega$. The estimates for $V_{\Gamma,\alpha}(\tilde{\mathbf{u}},\mathbf{u})$ now follow from (3.19) by combining the estimates for $R_\alpha(\tilde{\mathbf{u}},\mathbf{u})$ with (3.14).

An analogous argument shows the second part of (b).

(c): Observe that the function $\theta \mapsto \lambda \cdot \theta^4$ is $(4\lambda r^3)$-Lipschitz on $[0,r]$, such that, by (3.15), for each $(\tilde{\mathbf{u}},\mathbf{u},\mathbf{v}) \in [0,r]^{I_\Omega} \times [0,r]^{I_\Omega} \times [0,r]^{I_\Omega}$, $\alpha \in I_\Omega$:

$$\begin{aligned}
&\left|\big(R_\alpha(\tilde{\mathbf{u}},\mathbf{u}) - R_\alpha(\tilde{\mathbf{u}},\mathbf{v})\big)\,\lambda_2(\zeta_\alpha) - \big(1-\epsilon(\tilde{u}_\alpha)\big)\sum_{\beta\in I_\Omega}\big(R_\beta(\tilde{\mathbf{u}},\mathbf{u}) - R_\beta(\tilde{\mathbf{u}},\mathbf{v})\big)\,\Lambda_{\alpha,\beta}\right| \\
&= \sigma\,\epsilon(\tilde{u}_\alpha)\left|u_\alpha^4 - v_\alpha^4\right|\lambda_2(\zeta_\alpha) \leq 4\,\sigma\,\epsilon(\tilde{u}_\alpha)\left|u_\alpha - v_\alpha\right|\lambda_2(\zeta_\alpha)\,r^3. \qquad (3.24)
\end{aligned}$$

Now, let $\alpha \in I_\Omega$ be such that $N_{\max} := \|\mathbf{R}(\tilde{\mathbf{u}},\mathbf{u}) - \mathbf{R}(\tilde{\mathbf{u}},\mathbf{v})\|_{\max} = |R_\alpha(\tilde{\mathbf{u}},\mathbf{u}) - R_\alpha(\tilde{\mathbf{u}},\mathbf{v})|$. Then (3.24) implies

$$\begin{aligned}
&4\,\sigma\,\epsilon(\tilde{u}_\alpha)\,\|\mathbf{u}-\mathbf{v}\|_{\max}\,\lambda_2(\zeta_\alpha)\,r^3 \\
&\overset{(3.24)}{\geq} \left|N_{\max}\,\lambda_2(\zeta_\alpha) - \big(1-\epsilon(\tilde{u}_\alpha)\big)\left|\sum_{\beta\in I_\Omega}\big(R_\beta(\tilde{\mathbf{u}},\mathbf{u}) - R_\beta(\tilde{\mathbf{u}},\mathbf{v})\big)\,\Lambda_{\alpha,\beta}\right|\right| \\
&\overset{\text{Lem. 3.4(a)}}{\geq} N_{\max}\,\lambda_2(\zeta_\alpha) - \big(1-\epsilon(\tilde{u}_\alpha)\big)\left|\sum_{\beta\in I_\Omega}\big(R_\beta(\tilde{\mathbf{u}},\mathbf{u}) - R_\beta(\tilde{\mathbf{u}},\mathbf{v})\big)\,\Lambda_{\alpha,\beta}\right| \\
&\geq N_{\max}\left(\lambda_2(\zeta_\alpha) - \big(1-\epsilon(\tilde{u}_\alpha)\big)\sum_{\beta\in I_\Omega}\Lambda_{\alpha,\beta}\right) \overset{(3.14)}{\geq} N_{\max}\,\epsilon(\tilde{u}_\alpha)\,\lambda_2(\zeta_\alpha),
\end{aligned}$$

showing that $\mathbf{R}(\tilde{\mathbf{u}},\cdot)$ is $(4\,\sigma\,r^3)$-Lipschitz on $[0,r]^{I_\Omega}$. The claimed Lipschitz continuity of $\mathbf{V}_\Gamma(\tilde{\mathbf{u}},\cdot)$ now follows from (3.19).

An analogous argument shows the second part of (c). ■

3.4 Approximation of the Source Term and of the Initial Condition

For the approximation of the source term, let

$$f_{m,\nu,i} \approx \frac{\int_{t_{\nu-1}}^{t_\nu}\int_{\omega_{m,i}} f_m}{k_\nu\,\lambda_3(\omega_{m,i})} \qquad (3.25)$$

be a suitable approximation, where, in general, the choice will depend on the regularity of f_m (for f_m continuous, one might choose $f_{m,\nu,i} := f_m(t_\nu, x_i)$, but $f_{m,\nu,i} := (k_\nu\,\lambda_3(\omega_{m,i}))^{-1}\int_{t_{\nu-1}}^{t_\nu}\int_{\omega_{m,i}} f_m$ for a general $f_m \in L^\infty(0,T,L^\infty(\Omega_m))$). However, a suitable approximation is assumed to satisfy:

(AA-1) For each $m \in \{\mathrm{s}, \mathrm{g}\}$, $\nu \in \{0, \ldots, N\}$, and $i \in I$:

$$0 \leq f_{m,\nu,i} \leq \|f_m\|_{L^\infty(t_{\nu-1},\, t_\nu,\, L^\infty(\omega_{m,i}))}.$$

Remark 3.8. If (A-5) holds, then $f_{m,\nu,i} := (k_\nu\, \lambda_3(\omega_{m,i}))^{-1} \int_{t_{\nu-1}}^{t_\nu} \int_{\omega_{m,i}} f_m$ guarantees (AA-1). If f_m is continuous, then (AA-1) is also satisfied for $f_{m,\nu,i} := f_m(t_\nu, x_i)$.

Let $\theta_{\mathrm{init},i}$ be a suitable approximation of θ_{init} on ω_i, $i \in I$. For a continuous θ_{init}, one might choose $\theta_{\mathrm{init},i} := \theta_{\mathrm{init}}(x_i)$, in contrast to $\theta_{\mathrm{init},i} := (\lambda_3(\omega_i))^{-1} \int_{\omega_i} \theta_{\mathrm{init}}$ for a general $\theta_{\mathrm{init}} \in L^\infty(\overline{\Omega}, \mathbb{R}_0^+)$. A suitable approximation is assumed to satisfy:

(AA-2) For each $i \in I$:

$$0 \leq \operatorname{ess\,inf}(\theta_{\mathrm{init}} \restriction_{\omega_i}) \leq \theta_{\mathrm{init},i} \leq \|\theta_{\mathrm{init}}\|_{L^\infty(\omega_i, \mathbb{R}_0^+)},$$

where $\operatorname{ess\,inf}(\theta_{\mathrm{init}} \restriction_{\omega_i})$ denotes the essential infimum of θ_{init} on the set ω_i.

Remark 3.9. (AA-2) is satisfied for $\theta_{\mathrm{init},i} = \theta_{\mathrm{init}}(x_i)$ (for a continuous θ_{init}) and for $\theta_{\mathrm{init},i} = (\lambda_3(\omega_i))^{-1} \int_{\omega_i} \theta_{\mathrm{init}}$ (for a general θ_{init}).

3.5 The Finite Volume Scheme

For $\mathbf{u} = (u_i)_{i \in I}$, define

$$\mathbf{u} \restriction_{I_\Omega} := (u_{i(\alpha)})_{\alpha \in I_\Omega}, \qquad \mathbf{u} \restriction_{I_\Sigma} := (u_{i(\alpha)})_{\alpha \in I_\Sigma}. \tag{3.26}$$

At this point, all preparations are in place to state the finite volume scheme in (3.27) and (3.28) below. The terms in (3.28) arise from (3.2) after summing over $m \in \{\mathrm{s}, \mathrm{g}\}$ and employing the approximations (3.4), (3.6), (3.9), (3.25), (3.20), and (3.21), respectively. One is seeking a nonnegative solution $(\mathbf{u}_0, \ldots, \mathbf{u}_N)$, $\mathbf{u}_\nu = (u_{\nu,i})_{i \in I}$, to

$$u_{0,i} = \theta_{\mathrm{init},i} \qquad (i \in I), \tag{3.27a}$$

$$\mathcal{H}_{\nu,i}(\mathbf{u}_{\nu-1}, \mathbf{u}_\nu) = 0 \qquad (i \in I, \quad \nu \in \{1, \ldots, N\}), \tag{3.27b}$$

where, for each $\nu \in \{1, \ldots, N\}$:

$$\mathcal{H}_{\nu,i} : (\mathbb{R}_0^+)^I \times (\mathbb{R}_0^+)^I \longrightarrow \mathbb{R},$$

$$\mathcal{H}_{\nu,i}(\tilde{\mathbf{u}}, \mathbf{u}) = k_\nu^{-1} \sum_{m \in \{\mathrm{s},\mathrm{g}\}} \big(\varepsilon_m(u_i) - \varepsilon_m(\tilde{u}_i)\big) \cdot \lambda_3(\omega_{m,i}) \tag{3.28a}$$

$$- \sum_{m \in \{\mathrm{s},\mathrm{g}\}} \kappa_m \sum_{j \in \mathrm{nb}_m(i)} \frac{u_j - u_i}{\|x_i - x_j\|_2} \cdot \lambda_2\big(\partial\omega_{m,i} \cap \partial\omega_{m,j}\big) \tag{3.28b}$$

$$+ \sigma\, \epsilon(\tilde{u}_i)\, u_i^4 \cdot \lambda_2\big(\partial\omega_{\mathrm{s},i} \cap \Gamma_\Omega\big) - \sum_{\alpha \in J_{\Omega,i}} V_{\Gamma,\alpha}(\tilde{\mathbf{u}} \restriction_{I_\Omega}, \mathbf{u} \restriction_{I_\Omega}) \tag{3.28c}$$

$$+ \sigma\, \epsilon(\tilde{u}_i) \cdot (u_i^4 - \theta_{\mathrm{ext}}^4) \cdot \lambda_2\big(\partial\omega_{\mathrm{s},i} \cap (\partial\Omega \setminus \Gamma_\Omega)\big) \tag{3.28d}$$

$$+ \sigma\, \epsilon(\tilde{u}_i)\, u_i^4 \cdot \lambda_2\big(\omega_i \cap \Sigma\big) - \sum_{\alpha \in J_{\Sigma,i}} V_{\Sigma,\alpha}(\tilde{\mathbf{u}}\restriction_{I_\Sigma}, \mathbf{u}\restriction_{I_\Sigma}) \tag{3.28e}$$

$$- \sum_{m \in \{\mathrm{s},\mathrm{g}\}} f_{m,\nu,i} \cdot \lambda_3(\omega_{m,i}). \tag{3.28f}$$

In general, many summands in (3.28) vanish, e.g. if $\omega_i \subseteq \Omega_\mathrm{g}$ and $\omega_{\mathrm{s},i} = \emptyset$.

3.6 Modifications for the Axisymmetric Case

Suppose the space domains Ω_s and Ω_g are axisymmetric, and, in cylindrical coordinates (r, ϑ, z), the considered space-dependent functions (here: θ, f_s and f_g) are independent of the angular coordinate ϑ.

Then the circular projection $(r, \vartheta, z) \mapsto (r, z)$ can be used to reduce the model of Sec. 2 as well as the finite volume scheme to two space dimensions. For the nonlocal radiation terms R and J (see Sections 2.2, 2.3, and 3.3 above), the dimension reduction for the axisymmetric case was carried out in [Phi03, Sections 2.4.3, 3.7.8]. Even though the cylindrical symmetry affects the calculation of visibility and view factors, the essential properties of the radiation matrices proved in Lemmas 3.4 and 3.7 persist. We stress once more that, in our reasoning above, we have not used $\Lambda_{\alpha,\alpha} = 0$, as, in general, it is not valid in the axisymmetric case.

In a more general context, it was shown in [Phi03, Sec. 3.6], how symmetry conditions together with a change of variables can be used to reduce the space dimension in a finite volume scheme. In the case of cylindrical coordinates, the change of variables merely yields a factor r in the integrands occurring in (3.4), (3.6), (3.9), (3.20), and (3.21), and thus in the corresponding terms in (3.28).

In consequence, for the axisymmetric finite volume scheme, analogous reasoning to the contents of the following Section 4 can still be used to prove a maximum principle as well as existence and uniqueness for the discrete solution, analogous to Th. 4.3, Cor. 4.4, Th. 4.5, and Rem. 4.6 below.

4 Discrete Existence and Uniqueness

4.1 A Root Problem with Maximum Principle

The proof of the existence and uniqueness of a discrete solution to the finite volume scheme (3.27) in Th. 4.3 and Th. 4.5 below is based on the solution to the root problem in Th. 4.2 below. Theorem 4.2 establishes a maximum principle for roots to a certain type of continuous discrete nonlinear operator $\mathcal{H}$. The maximum principle is a consequence of the assumption that the components $\mathcal{H}_i$ of $\mathcal{H}$ can be decomposed into scalar-dependent continuous functions b_i and $\tilde{h}_i$, and a vector-dependent continuous function $\tilde{g}_i$ such that the b_i are sufficiently increasing, and $\tilde{g}_i - \tilde{h}_i$ satisfy the boundedness condition in Th. 4.2(ii).

Existence and uniqueness of the solution to the root problem in Th. 4.2 is founded on the following Lem. 4.1, providing a unique root to continuous functions $\mathcal{H} : [m, M]^I \longrightarrow \mathbb{R}^I$, presuming the components $\mathcal{H}_i$ of $\mathcal{H}$ can be decomposed into the difference of a scalar-dependent, sufficiently increasing function h_i and a vector-dependent, Lipschitz continuous function g_i.

Lemma 4.1. *Let $m, M \in \mathbb{R}$ with $m < M$. Given a finite, nonempty index set I, consider an operator*

$$\mathcal{H} : [m, M]^I \longrightarrow \mathbb{R}^I, \quad \mathcal{H}(\mathbf{u}) = \big(\mathcal{H}_i(\mathbf{u})\big)_{i \in I}. \tag{4.1}$$

Assume there are continuous functions $h_i \in C([m, M], \mathbb{R})$, $g_i \in C([m, M]^I, \mathbb{R})$, $i \in I$, and families of numbers $(L_{g,i})_{i \in I} \in (\mathbb{R}_0^+)^I$, $(C_{h,i})_{i \in I} \in (\mathbb{R}^+)^I$, such that the following conditions (i) – (v) *are satisfied.*

(i) *For each $i \in I$, $\mathbf{u} \in [m, M]^I$: $\mathcal{H}_i(\mathbf{u}) = h_i(u_i) - g_i(\mathbf{u})$.*

(ii) *For each $i \in I$, $\mathbf{u} \in [m, M]^I$: $h_i(m) \leq g_i(\mathbf{u}) \leq h_i(M)$.*

(iii) *Each g_i, $i \in I$, is $L_{g,i}$-Lipschitz with respect to the max-norm on $[m, M]^I$.*

(iv) *For each $i \in I$ and $M \geq \theta_2 \geq \theta_1 \geq m$: $h_i(\theta_2) \geq (\theta_2 - \theta_1)\, C_{h,i} + h_i(\theta_1)$.*

(v) *$L_{g,i} < C_{h,i}$ for each $i \in I$.*

Then $\mathcal{H}$ has a unique root in $[m, M]^I$, i.e. there is a unique $\mathbf{u}_0 \in [m, M]^I$ such that $\mathcal{H}(\mathbf{u}_0) = \mathbf{0}$, where $\mathbf{0} := (0, \ldots, 0)$.

Proof. Define

$$f : [m, M]^I \longrightarrow [m, M]^I, \quad f_i := h_i^{-1} \circ g_i. \tag{4.2}$$

It is noted that the h_i^{-1} exist on $[h_i(m), h_i(M)]$, as the h_i are assumed continuous, as well as strictly increasing on $[m, M]$ by (iv). Moreover, h_i^{-1} can be composed with g_i by (ii).

According to (iv), h_i^{-1} is $C_{h,i}^{-1}$-Lipschitz, which, together with (iii) and (v), implies that each f_i is $\frac{L_{g,i}}{C_{h,i}}$-contracting. Then f is also contracting and the Banach fixed point theorem yields that f has a unique fixed point $\mathbf{u}_0 = (u_{0,k})_{i \in I} \in [m, M]^I$. According to (i), (iv), and (4.2), $\mathbf{u}_0$ is a fixed point of f if, and only if, $\mathbf{u}_0$ is a root of $\mathcal{H}$, i.e. the proof is complete. ■

Theorem 4.2. *Let $\tau \subseteq \mathbb{R}$ be a (closed, open, half-open, bounded or unbounded) interval. Given a finite, nonempty index set I, and given $\tilde{\mathbf{u}} \in \tau^I$, consider a continuous operator*

$$\mathcal{H} : \tau^I \longrightarrow \mathbb{R}^I, \quad \mathcal{H}(\mathbf{u}) = \big(\mathcal{H}_i(\mathbf{u})\big)_{i \in I}. \tag{4.3}$$

Assume there are continuous functions $b_i \in C(\tau, \mathbb{R})$, $\tilde{h}_i \in C(\tau, \mathbb{R})$, $\tilde{g}_i \in C(\tau^I, \mathbb{R})$, $i \in I$, such that the following conditions (i) – (iii) *are satisfied.*

(i) *There is* $\tilde{\mathbf{u}} \in \tau^I$ *such that, for each* $i \in I$, $\mathbf{u} \in \tau^I$*:*

$$\mathcal{H}_i(\mathbf{u}) = b_i(u_i) + \tilde{h}_i(u_i) - b_i(\tilde{u}_i) - \tilde{g}_i(\mathbf{u}).$$

(ii) *There are* $\tilde{m}, \tilde{M} \in \tau$*, a family of nonpositive numbers* $(\beta_i)_{i\in I} \in (\mathbb{R}_0^-)^I$*, and a family of nonnegative numbers* $(B_i)_{i\in I} \in (\mathbb{R}_0^+)^I$ *such that, for each* $i \in I$*,* $\mathbf{u} \in \tau^I$*,* $\theta \in \tau$*:*

$$\max\left\{\max(\mathbf{u}),\, \tilde{M}\right\} \le \theta \qquad \Rightarrow \qquad \tilde{g}_i(\mathbf{u}) - \tilde{h}_i(\theta) \le B_i, \tag{4.4a}$$

$$\theta \le \min\left\{\tilde{m},\, \min(\mathbf{u})\right\} \qquad \Rightarrow \qquad \tilde{g}_i(\mathbf{u}) - \tilde{h}_i(\theta) \ge \beta_i, \tag{4.4b}$$

where $\max(\mathbf{u})$ *and* $\min(\mathbf{u})$ *are according to* (3.22)*.*

(iii) *There is a family of positive numbers* $(C_{b,i})_{i\in I} \in (\mathbb{R}^+)^I$ *such that, for each* $i \in I$ *and* $\theta_1, \theta_2 \in \tau$*:* $\quad \theta_2 \ge \theta_1 \quad \Rightarrow \quad b_i(\theta_2) \ge (\theta_2 - \theta_1)\, C_{b,i} + b_i(\theta_1)$*.*

Letting

$$\beta := \min\left\{\frac{\beta_i}{C_{b,i}} : i \in I\right\}, \qquad B := \max\left\{\frac{B_i}{C_{b,i}} : i \in I\right\}, \tag{4.5}$$

$$m(\tilde{\mathbf{u}}) := \min\left\{\tilde{m},\, \min(\tilde{\mathbf{u}}) + \beta\right\}, \qquad M(\tilde{\mathbf{u}}) := \max\left\{\tilde{M},\, \max(\tilde{\mathbf{u}}) + B\right\}, \tag{4.6}$$

we have the following maximum pinciple: If $\mathbf{u}_0 \in \tau^I$ *satisfies* $\mathcal{H}(\mathbf{u}_0) = \mathbf{0} := (0, \ldots, 0)$*, then* $\mathbf{u}_0 \in [m(\tilde{\mathbf{u}}), M(\tilde{\mathbf{u}})]^I$*.*

If, in addition to (i) – (iii)*, the following conditions* (iv) – (vi) *are satisfied, then there is a unique* $\mathbf{u}_0 \in [m(\tilde{\mathbf{u}}), M(\tilde{\mathbf{u}})]^I$ *such that* $\mathcal{H}(\mathbf{u}_0) = \mathbf{0}$*.*

(iv) *For each* $i \in I$*, there is* $L_{g,i}(\tilde{\mathbf{u}}) \in \mathbb{R}_0^+$ *such that* $\tilde{g}_i$ *is* $L_{g,i}(\tilde{\mathbf{u}})$*-Lipschitz with respect to the max-norm on* $[m(\tilde{\mathbf{u}}), M(\tilde{\mathbf{u}})]^I$*.*

(v) *For each* $i \in I$*, there is* $C_{\tilde{h},i}(\tilde{\mathbf{u}}) \in \mathbb{R}_0^+$ *such that, for each* $\theta_1, \theta_2 \in [m(\tilde{\mathbf{u}}), M(\tilde{\mathbf{u}})]$*:* $\theta_2 \ge \theta_1 \quad \Rightarrow \quad \tilde{h}_i(\theta_2) \ge (\theta_2 - \theta_1)\, C_{\tilde{h},i}(\tilde{\mathbf{u}}) + \tilde{h}_i(\theta_1)$*.*

(vi) $L_{g,i}(\tilde{\mathbf{u}}) < C_{b,i} + C_{\tilde{h},i}(\tilde{\mathbf{u}})$ *for each* $i \in I$*.*

Proof. We start by showing that, given (i) – (iii), each root of $\mathcal{H}$ must lie in $[m(\tilde{\mathbf{u}}), M(\tilde{\mathbf{u}})]^I$. Consider $\mathbf{u} \in \tau^I$, $\max(\mathbf{u}) > M(\tilde{\mathbf{u}})$. Let $i \in I$ be such that $u_i = \max(\mathbf{u})$. Then, since $u_i > M(\tilde{\mathbf{u}}) \ge \tilde{M}$, (4.4a) applies with $\theta = u_i$, yielding

$$\tilde{g}_i(\mathbf{u}) - \tilde{h}_i(u_i) \le B_i. \tag{4.7}$$

Moreover, since $u_i > M(\tilde{\mathbf{u}}) \ge \max(\tilde{\mathbf{u}}) + B \ge \tilde{u}_i$, one can apply (iii) with $\theta_2 = u_i$ and $\theta_1 = \tilde{u}_i$ to get

$$b_i(u_i) \ge (u_i - \tilde{u}_i)\, C_{b,i} + b_i(\tilde{u}_i). \tag{4.8}$$

Combining (4.7) and (4.8) with (i), we find

$$\mathcal{H}_i(\mathbf{u}) \ge (u_i - \tilde{u}_i)\, C_{b,i} - B_i > (\tilde{u}_i + B - \tilde{u}_i)\, C_{b,i} - B_i \ge 0, \tag{4.9}$$

i.e. $\mathbf{u}$ is not a root of $\mathcal{H}$. An analogous argument shows that, if $\mathbf{u} \in \tau^I$ and $\min(\mathbf{u}) < m(\tilde{\mathbf{u}})$, then $\mathbf{u}$ is not a root of $\mathcal{H}$, concluding the proof that each root of $\mathcal{H}$ must lie in $[m(\tilde{\mathbf{u}}), M(\tilde{\mathbf{u}})]^I$.

It remains to show that $\mathcal{H}$ has a unique root in $[m(\tilde{\mathbf{u}}), M(\tilde{\mathbf{u}})]^I$. This is done by an application of Lem. 4.1. If, for $i \in I$, $h_i \in C\big([m(\tilde{\mathbf{u}}), M(\tilde{\mathbf{u}})], \mathbb{R}\big)$, $h_i := b_i + \tilde{h}_i$, $g_i \in C\big([m(\tilde{\mathbf{u}}), M(\tilde{\mathbf{u}})]^I, \mathbb{R}\big)$, $g_i(\mathbf{u}) := b_i(\tilde{u}_i) + \tilde{g}_i(\mathbf{u})$, then (i) immediately implies condition (i) of Lem. 4.1. The verification of conditions (ii) – (v) of Lem. 4.1 is the remaining task of this proof.

Lem. 4.1(ii): One has to show

$$b_i\big(m(\tilde{\mathbf{u}})\big) + \tilde{h}_i\big(m(\tilde{\mathbf{u}})\big) \le b_i(\tilde{u}_i) + \tilde{g}_i(\mathbf{u}) \le b_i\big(M(\tilde{\mathbf{u}})\big) + \tilde{h}_i\big(M(\tilde{\mathbf{u}})\big) \tag{4.10}$$

for each $\mathbf{u} \in [m(\tilde{\mathbf{u}}), M(\tilde{\mathbf{u}})]^I$, $i \in I$. Since $m(\tilde{\mathbf{u}}) \le \tilde{m}$, one can apply (4.4b) with $\theta = m(\tilde{\mathbf{u}})$, and, since $m(\tilde{\mathbf{u}}) \le \tilde{u}_i$, one can apply (iii) with $\theta_1 = m(\tilde{\mathbf{u}})$ and $\theta_2 = \tilde{u}_i$. This yields

$$b_i\big(m(\tilde{\mathbf{u}})\big) + \tilde{h}_i\big(m(\tilde{\mathbf{u}})\big) \le b_i(\tilde{u}_i) - \big(\tilde{u}_i - m(\tilde{\mathbf{u}})\big)\, C_{b,i} + g_i(\mathbf{u}) - \beta_i \le b_i(\tilde{u}_i) + \tilde{g}_i(\mathbf{u}), \tag{4.11}$$

where the last inequality is due to $m(\tilde{\mathbf{u}}) \le \tilde{u}_i + \frac{\beta_i}{C_{b,i}}$. The first inequality of (4.10) is proved by (4.11), and an analogous argument shows the second inequality of (4.10).

Lem. 4.1(iii): Each g_i, $i \in I$, is $L_{g,i} := L_{g,i}(\tilde{\mathbf{u}})$-Lipschitz with respect to the max-norm on $[m(\tilde{\mathbf{u}}), M(\tilde{\mathbf{u}})]^I$, since $\tilde{g}_i$ is $L_{g,i}$-Lipschitz with respect to the max-norm on $[m(\tilde{\mathbf{u}}), M(\tilde{\mathbf{u}})]^I$ according to hypothesis (iv).

Lem. 4.1(iv): Letting $C_{h,i} := C_{b,i} + C_{\tilde{h},i}(\tilde{\mathbf{u}})$, for $m(\tilde{\mathbf{u}}) \le \theta_1 \le \theta_2 \le M(\tilde{\mathbf{u}})$, one has to verify

$$h_i(\theta_2) \ge (\theta_2 - \theta_1)\, C_{h,i} + h_i(\theta_1). \tag{4.12}$$

Since $h_i = b_i + \tilde{h}_i$ on $[m(\tilde{\mathbf{u}}), M(\tilde{\mathbf{u}})]$, (4.12) follows by adding the conditions in (iii) and (v).

Lem. 4.1(v): By hypothesis (vi), one has $L_{g,i} = L_{g,i}(\tilde{\mathbf{u}}) < C_{b,i} + C_{\tilde{h},i}(\tilde{\mathbf{u}}) = C_{h,i}$ for each $i \in I$ as needed.

Since all hypotheses of Lem. 4.1 are verified, Lem. 4.1 grants that $\mathcal{H}$ has a unique root in $[m(\tilde{\mathbf{u}}), M(\tilde{\mathbf{u}})]^I$, thereby concluding the proof of Th. 4.2. ■

4.2 Existence and Uniqueness of a Discrete Solution to the Finite Volume Scheme, Maximum Principle

The following Th. 4.3 is the main building block for all the discrete existence and uniqueness results provided subsequently. Theorem 4.3 can be considered as a discrete existence result with maximum principle, locally in time. Given an arbitrary vector $\tilde{\mathbf{u}} \in (\mathbb{R}_0^+)^I$, Th. 4.3 establishes that each root of the finite volume scheme operator $\mathcal{H}_\nu(\tilde{\mathbf{u}}, \cdot)$ of (3.28) satisfies a maximum principle. Moreover, Th. 4.3 proves the existence of a unique root to $\mathcal{H}_\nu(\tilde{\mathbf{u}}, \cdot)$, provided that the ν-th time step k_ν is sufficiently small.

The upper and lower bound for the solution, respectively given by (4.13c) and (4.13d) below, are determined by the external temperature θ_{ext}, by the max and min of $\tilde{\mathbf{u}}$ as defined in (3.22), by the size of the time step, and by the values of the heat sources in the time interval $[t_{\nu-1}, t_\nu]$.

The condition on the time step size (4.15) arises from the nonlocal terms in (3.28), namely, (3.28b), (3.28c), and (3.28d). It depends on the constant $L_{\mathbf{V}}$ defined in (4.13b) below, involving the ratios between the size of boundary elements and adjacent volume elements. Thus, $L_{\mathbf{V}}$ is of order h^{-1} if h is a parameter for the fineness of a space discretization constructed by uniform refinement of some initial grid.

Letting $\tilde{\mathbf{u}} = \mathbf{u}_{\nu-1}$, as a direct consequence of Th. 4.3, for k_ν small enough, each non-negative solution $(\mathbf{u}_0, \ldots, \mathbf{u}_{\nu-1})$ to the finite volume scheme (3.27) with N replaced by $\nu - 1 < N$, can be uniquely extended to $t = t_\nu$ (s. Cor. 4.4).

Finally, in Th. 4.5, we use an inductive argument to show that condition (4.15) and the bounds from the maximum principle are sufficiently benign to guarantee a unique solution to the entire finite volume scheme (3.27).

Theorem 4.3. *Assume* (A-1) – (A-8), (DA-1) – (DA-7), (AA-1) *and* (AA-2). *Moreover, assume* $\nu \in \{1, \ldots, N\}$ *and* $\tilde{\mathbf{u}} = (\tilde{u}_i)_{i\in I} \in \left(\mathbb{R}_0^+\right)^I$. *Let*

$$B_{f,\nu} := \max\left\{ \sum_{m\in\{\text{s},\text{g}\}} f_{m,\nu,i} \cdot \frac{\lambda_3(\omega_{m,i})}{\lambda_3(\omega_i)} \,:\, i \in I \right\}, \tag{4.13a}$$

$$L_{\mathbf{V}} := 4\,\sigma \,\max\left\{ \frac{\lambda_2(\omega_i \cap \Sigma)}{\lambda_3(\omega_i)} + \sum_{\alpha\in J_{\Omega,i}} \frac{\lambda_2(\zeta_\alpha) - \Lambda_{\alpha,\text{ph}}}{\lambda_3(\omega_i)} \,:\, i \in I \right\}, \tag{4.13b}$$

$$m(\tilde{\mathbf{u}}) := \min\left\{ \theta_{\text{ext}},\, \min(\tilde{\mathbf{u}}) \right\}, \tag{4.13c}$$

$$M_\nu(\tilde{\mathbf{u}}) := \max\left\{ \theta_{\text{ext}},\, \max(\tilde{\mathbf{u}}) + \frac{k_\nu}{C_\varepsilon} B_{f,\nu} \right\}, \tag{4.13d}$$

with $\min(\tilde{\mathbf{u}})$, $\max(\tilde{\mathbf{u}})$ *according to* (3.22), *and* C_ε *according to* (A-3).

Then we have the maximum principle that each solution $\mathbf{u}_\nu = (u_{\nu,i})_{i\in I} \in \left(\mathbb{R}_0^+\right)^I$ *to*

$$\mathcal{H}_{\nu,i}(\tilde{\mathbf{u}}, \mathbf{u}_\nu) = 0 \qquad (i \in I) \tag{4.14}$$

must lie in $[m(\tilde{\mathbf{u}}), M_\nu(\tilde{\mathbf{u}})]^I$. *Furthermore, if* k_ν *is such that*

$$k_\nu \left(M_\nu(\tilde{\mathbf{u}})^3 - m(\tilde{\mathbf{u}})^3 \right) L_{\mathbf{V}} < C_\varepsilon, \tag{4.15}$$

then there is a unique $\mathbf{u}_\nu \in [m(\tilde{\mathbf{u}}), M_\nu(\tilde{\mathbf{u}})]^I$ *satisfying* (4.14).

Proof. Before starting with the main part of the proof, we would like to point out that, by choosing k_ν sufficiently small, one can ensure that (4.15) is satisfied.

Now, the goal is to apply Th. 4.2 with $\tau = \mathbb{R}_0^+$ and $\mathcal{H}_\nu(\tilde{\mathbf{u}}, \cdot)$ playing the role of $\mathcal{H}$. To that end, we will define continuous functions $b_{\nu,i}$, $\tilde{h}_i$, $\tilde{g}_{\nu,i}$, as well as numbers

$\tilde{m}, \tilde{M} \in \mathbb{R}_0^+$, $\beta_i \in \mathbb{R}_0^-$, $B_{\nu,i} \in \mathbb{R}_0^+$, $C_{b,\nu,i} \in \mathbb{R}^+$, $L_{g,\nu,i}(\tilde{\mathbf{u}}) \in \mathbb{R}^+$, and $C_{\tilde{h},\nu,i}(\tilde{\mathbf{u}}) \in \mathbb{R}^+$ that satisfy the hypotheses of Th. 4.2 (where the quantities with index ν correspond to the matching quantities without index ν in Th. 4.2). Condition (4.15) will *only* be needed to prove hypothesis (vi) of Th. 4.2.

For each $i \in I$, let

$$b_{\nu,i} : \mathbb{R}_0^+ \longrightarrow \mathbb{R}_0^+, \qquad b_{\nu,i}(\theta) := k_\nu^{-1} \sum_{m\in\{\mathrm{s},\mathrm{g}\}} \varepsilon_m(\theta) \cdot \lambda_3(\omega_{m,i}), \tag{4.16a}$$

$$L_{\kappa,i} := \sum_{m\in\{\mathrm{s},\mathrm{g}\}} \kappa_m \sum_{j\in\mathrm{nb}_m(i)} \frac{\lambda_2\big(\partial\omega_{m,i} \cap \partial\omega_{m,j}\big)}{\|x_i - x_j\|_2} \geq 0, \tag{4.16b}$$

$$\begin{aligned} C_{\mathbf{V},i}(\tilde{\mathbf{u}}) &:= \sigma\,\epsilon(\tilde{u}_i) \cdot \lambda_2\big(\partial\omega_{\mathrm{s},i} \cap \Gamma_\Omega\big) \\ &\quad + \sigma\,\epsilon(\tilde{u}_i) \cdot \lambda_2\big(\partial\omega_{\mathrm{s},i} \cap (\partial\Omega \setminus \Gamma_\Omega)\big) + \sigma\,\epsilon(\tilde{u}_i) \cdot \lambda_2(\omega_i \cap \Sigma) \geq 0, \end{aligned} \tag{4.16c}$$

$$\tilde{h}_i : \mathbb{R}_0^+ \longrightarrow \mathbb{R}_0^+, \qquad \tilde{h}_i(\theta) := \theta\, L_{\kappa,i} + \theta^4\, C_{\mathbf{V},i}(\tilde{\mathbf{u}}), \tag{4.16d}$$

$$\begin{aligned} &\tilde{g}_{\nu,i} : (\mathbb{R}_0^+)^I \longrightarrow \mathbb{R}_0^+, \\ &\tilde{g}_{\nu,i}(\mathbf{u}) := \sum_{m\in\{\mathrm{s},\mathrm{g}\}} \kappa_m \sum_{j\in\mathrm{nb}_m(i)} \frac{u_j}{\|x_i - x_j\|_2} \cdot \lambda_2(\partial\omega_{m,i} \cap \partial\omega_{m,j}) \\ &\qquad + \sum_{\alpha\in J_{\Omega,i}} V_{\Gamma,\alpha}(\tilde{\mathbf{u}}\restriction_{I_\Omega}, \mathbf{u}\restriction_{I_\Omega}) + \sigma\,\epsilon(\tilde{u}_i)\,\theta_{\mathrm{ext}}^4 \cdot \lambda_2\big(\partial\omega_{\mathrm{s},i} \cap (\partial\Omega \setminus \Gamma_\Omega)\big) \\ &\qquad + \sum_{\alpha\in J_{\Sigma,i}} V_{\Sigma,\alpha}(\tilde{\mathbf{u}}\restriction_{I_\Sigma}, \mathbf{u}\restriction_{I_\Sigma}) + \sum_{m\in\{\mathrm{s},\mathrm{g}\}} f_{m,\nu,i} \cdot \lambda_3(\omega_{m,i}), \end{aligned} \tag{4.16e}$$

$$\tilde{m} := \tilde{M} := \theta_{\mathrm{ext}}, \qquad \beta_i := 0, \qquad B_{\nu,i} := \sum_{m\in\{\mathrm{s},\mathrm{g}\}} f_{m,\nu,i} \cdot \lambda_3(\omega_{m,i}), \tag{4.16f}$$

$$C_{b,\nu,i} := k_\nu^{-1}\, C_\varepsilon \cdot \lambda_3(\omega_i) > 0, \tag{4.16g}$$

$$L_{\mathbf{V},i}(\tilde{\mathbf{u}}) := 4\,\sigma\,\epsilon(\tilde{u}_i) \left(\sum_{\alpha\in J_{\Omega,i}} (\lambda_2(\zeta_\alpha) - \Lambda_{\alpha,\mathrm{ph}}) + \lambda_2(\omega_i \cap \Sigma) \right) \geq 0, \tag{4.16h}$$

$$L_{g,\nu,i}(\tilde{\mathbf{u}}) := M_\nu(\tilde{\mathbf{u}})^3\, L_{\mathbf{V},i}(\tilde{\mathbf{u}}) + L_{\kappa,i} \geq 0, \tag{4.16i}$$

$$C_{h,\nu,i}(\tilde{\mathbf{u}}) := C_{b,\nu,i} + L_{\kappa,i} + 4\, m(\tilde{\mathbf{u}})^3\, C_{\mathbf{V},i}(\tilde{\mathbf{u}}) > 0. \tag{4.16j}$$

Claim 1. For each $i \in I$, $\tilde{\mathbf{u}} \in (\mathbb{R}_0^+)^I$, the numbers $L_{\kappa,i}$, $C_{\mathbf{V},i}(\tilde{\mathbf{u}})$, $L_{\mathbf{V},i}(\tilde{\mathbf{u}})$, $L_{g,\nu,i}$, and the functions $\tilde{h}_i$, $\tilde{g}_{\nu,i}$ are indeed nonnegative; the numbers $C_{b,\nu,i}$ and $C_{h,\nu,i}(\tilde{\mathbf{u}})$ are indeed positive.

Proof. The assumed nonnegativity of κ_m, σ, and ϵ implies that all summands in (4.16b) and (4.16c) are nonnegative, proving the nonnegativity of $L_{\kappa,i}$, $C_{\mathbf{V},i}(\tilde{\mathbf{u}})$, and $\tilde{h}_i$. Throwing in (3.14), the nonnegativity of $L_{\mathbf{V},i}(\tilde{\mathbf{u}})$ and $L_{g,\nu,i}$ is immediate from their definitions in (4.16h) and (4.16i), respectively. Using Lem. 3.7(a), (A-5) – (A-

7), and (AA-1), one sees that $\tilde{g}_{\nu,i} \geq 0$. Finally, since C_ε, k_ν, and $\lambda_3(\omega_i)$ are positive, so are $C_{b,\nu,i}$ and $C_{h,\nu,i}(\tilde{\mathbf{u}})$ by (4.16g) and (4.16j), respectively. ▲

Claim 2. The numbers $m(\tilde{\mathbf{u}})$ and $M_\nu(\tilde{\mathbf{u}})$ defined in (4.13c) and (4.13d), respectively, correspond to the numbers $m(\tilde{\mathbf{u}})$ and $M(\tilde{\mathbf{u}})$ as defined in (4.6) in Th. 4.2.

Proof. Since, for each $i \in I$, $\beta_i = 0$ according to (4.16f), one has $\beta = 0$ by (4.5), showing $m(\tilde{\mathbf{u}}) = \min\big\{\, \theta_{\text{ext}},\, \min(\tilde{\mathbf{u}}) + \beta \big\}$.

Since, for each $i \in I$, $B_{\nu,i} := \sum_{m\in\{\text{s},\text{g}\}} f_{m,\nu,i} \cdot \lambda_3(\omega_{m,i})$ according to (4.16f), one has

$$B = B_\nu := \max\left\{ \frac{B_{\nu,i}}{C_{b,\nu,i}} \,:\, i \in I \right\} = \frac{k_\nu}{C_\varepsilon}\, B_{f,\nu}$$

by (4.5), (4.13a), and (4.16g), showing $M_\nu(\tilde{\mathbf{u}}) = \max\Big\{\theta_{\text{ext}},\, \max(\tilde{\mathbf{u}}) + \frac{k_\nu}{C_\varepsilon} B_{f,\nu}\Big\}$. ▲

The hypotheses (i) – (vi) of Th. 4.2 are now verified consecutively.

Th. 4.2(i): To show $\mathcal{H}_{\nu,i}(\tilde{\mathbf{u}}, \mathbf{u}) = b_{\nu,i}(u_i) + \tilde{h}_i(u_i) - b_{\nu,i}(\tilde{u}_i) - \tilde{g}_{\nu,i}(\mathbf{u})$, observe

$$b_{\nu,i}(u_i) - b_{\nu,i}(\tilde{u}_i) = k_\nu^{-1} \sum_{m\in\{\text{s},\text{g}\}} \big(\varepsilon_m(u_i) - \varepsilon_m(\tilde{u}_i)\big) \cdot \lambda_3(\omega_{m,i}),$$

and definitions (4.16d), (4.16b), (4.16c), and (4.16e) are designed such that

$$\tilde{h}_i(u_i) - \tilde{g}_{\nu,i}(\mathbf{u}) = \mathcal{H}_{\nu,i}(\tilde{\mathbf{u}}, \mathbf{u}) - k_\nu^{-1} \sum_{m\in\{\text{s},\text{g}\}} \big(\varepsilon_m(u_i) - \varepsilon_m(\tilde{u}_i)\big) \cdot \lambda_3(\omega_{m,i}).$$

Th. 4.2(ii): One has to show that, for each $i \in I$, $\mathbf{u} \in (\mathbb{R}_0^+)^I$, $\theta \in \mathbb{R}_0^+$:

$$\max\big\{\, \max(\mathbf{u})\,,\, \theta_{\text{ext}} \big\} \leq \theta \qquad \Rightarrow \qquad \tilde{g}_{\nu,i}(\mathbf{u}) - \tilde{h}_i(\theta) \leq B_{\nu,i}, \tag{4.17a}$$

$$\theta \leq \min\big\{\theta_{\text{ext}},\, \min(\mathbf{u})\,\big\} \qquad \Rightarrow \qquad \tilde{g}_{\nu,i}(\mathbf{u}) - \tilde{h}_i(\theta) \geq 0. \tag{4.17b}$$

Considering Lem. 3.7(b) and Def. and Rem. 3.2, we see that

$$\sum_{\alpha\in J_{\Omega,i}} V_{\Gamma,\alpha}(\tilde{\mathbf{u}}\restriction_{I_\Omega}, \mathbf{u}\restriction_{I_\Omega}) \leq \sigma\, \epsilon(\tilde{u}_i) \max\big\{\, \max(\mathbf{u})^4\,,\, \theta_{\text{ext}}^4 \big\}\, \lambda_2(\partial\omega_{s,i} \cap \Gamma_\Omega),$$

$$\sum_{\alpha\in J_{\Sigma,i}} V_{\Sigma,\alpha}(\tilde{\mathbf{u}}\restriction_{I_\Sigma}, \mathbf{u}\restriction_{I_\Sigma}) \leq \sigma\, \epsilon(\tilde{u}_i)\, \max(\mathbf{u})^4\, \lambda_2(\omega_i \cap \Sigma).$$

If $\theta \geq \theta_{\text{ext}}$ and $\theta \geq \max(\mathbf{u})$, then, by recalling (4.13a) and (4.16b) – (4.16f), we have

$$\begin{aligned}
\tilde{g}_{\nu,i}(\mathbf{u}) \leq & \sum_{m\in\{\text{s},\text{g}\}} \kappa_m \sum_{j\in\text{nb}_m(i)} \frac{\theta}{\|x_i - x_j\|_2} \cdot \lambda_2\big(\partial\omega_{m,i} \cap \partial\omega_{m,j}\big) \\
& + \sigma\, \epsilon(\tilde{u}_i)\, \theta^4 \cdot \lambda_2(\partial\omega_{s,i} \cap \Gamma_\Omega) + \sigma\, \epsilon(\tilde{u}_i)\, \theta^4 \cdot \lambda_2\big(\partial\omega_{\text{s},i} \cap (\partial\Omega \setminus \Gamma_\Omega)\big) \\
& + \sigma\, \epsilon(\tilde{u}_i)\, \theta^4 \cdot \lambda_2(\omega_i \cap \Sigma) + \sum_{m\in\{\text{s},\text{g}\}} f_{m,\nu,i} \cdot \lambda_3(\omega_{m,i}) \\
= & \; \theta\, L_{\kappa,i} + \theta^4\, C_{\mathbf{V},i}(\tilde{\mathbf{u}}) + \sum_{m\in\{\text{s},\text{g}\}} f_{m,\nu,i} \cdot \lambda_3(\omega_{m,i}) = \tilde{h}_i(\theta) + B_{\nu,i},
\end{aligned}$$

proving (4.17a). On the other hand, if $\theta \le \theta_{\text{ext}}$ and $\theta \le \min(\mathbf{u})$, then, as $f_{m,\nu,i} \ge 0$ by (AA-1), an analogous computation shows $\tilde{g}_{\nu,i}(\mathbf{u}) \ge \theta\, L_{\kappa,i} + \theta^4\, C_{\mathbf{V},i}(\tilde{\mathbf{u}}) = \tilde{h}_i(\theta)$, proving (4.17b).

Th. 4.2(iii): That, for $\theta_2 \ge \theta_1 \ge 0$, one has $b_{\nu,i}(\theta_2) \ge (\theta_2 - \theta_1)\, C_{b,\nu,i} + b_{\nu,i}(\theta_1)$ is immediate from combining (A-3), (4.16a), and (4.16g).

Th. 4.2(iv): For each $i \in I$, one has to show that $\tilde{g}_{\nu,i}$ is $L_{g,\nu,i}(\tilde{\mathbf{u}})$-Lipschitz with respect to the max-norm on $[m(\tilde{\mathbf{u}}), M_\nu(\tilde{\mathbf{u}})]^I$. The function

$$\mathbf{u} \mapsto \sum_{m\in\{\text{s},\text{g}\}} \kappa_m \sum_{j\in \text{nb}_m(i)} \frac{u_j}{\|x_i - x_j\|_2} \cdot \lambda_2(\partial\omega_{m,i} \cap \partial\omega_{m,j}) \qquad \big(\mathbf{u} \in (\mathbb{R}_0^+)^I\big)$$

is $L_{\kappa,i}$-Lipschitz, $L_{\kappa,i}$ according to (4.16b). Lemma 3.7(c) and Def. and Rem. 3.2 show that $\sum_{\alpha\in J_{\Omega,i}} V_{\Gamma,\alpha}(\tilde{\mathbf{u}}\restriction_{I_\Omega}, \cdot)$ is $4\sigma\,\epsilon(\tilde{u}_i)\, M_\nu(\tilde{\mathbf{u}})^3 \left(\lambda_2(\partial\omega_{s,i} \cap \Gamma_\Omega) - \sum_{\alpha\in J_{\Omega,i}} \Lambda_{\alpha,\text{ph}}\right)$-Lipschitz on $[0, M_\nu(\tilde{\mathbf{u}})]^{I_\Omega}$ and that $\sum_{\alpha\in J_{\Sigma,i}} V_{\Sigma,\alpha}(\tilde{\mathbf{u}}\restriction_{I_\Sigma}, \cdot)$ is $4\sigma\,\epsilon(\tilde{u}_i)\, M_\nu(\tilde{\mathbf{u}})^3\, \lambda_2(\omega_i \cap \Sigma)$-Lipschitz on $[0, M_\nu(\tilde{\mathbf{u}})]^{I_\Sigma}$. Recalling (4.16h) yields that the function

$$\mathbf{u} \mapsto \sum_{\alpha\in J_{\Omega,i}} V_{\Gamma,\alpha}(\tilde{\mathbf{u}}\restriction_{I_\Omega}, \mathbf{u}\restriction_{I_\Omega}) + \sum_{\alpha\in J_{\Sigma,i}} V_{\Sigma,\alpha}(\tilde{\mathbf{u}}\restriction_{I_\Sigma}, \mathbf{u}\restriction_{I_\Omega})$$

is $M_\nu(\tilde{\mathbf{u}})^3\, L_{\mathbf{V},i}$ -Lipschitz on $[0, M_\nu(\tilde{\mathbf{u}})]^I$. Therefore, by (4.16e) and (4.16i), $\tilde{g}_{\nu,i}$ is $L_{g,\nu,i}(\tilde{\mathbf{u}})$-Lipschitz on $[m(\tilde{\mathbf{u}}), M_\nu(\tilde{\mathbf{u}})]^I$ as needed.

Th. 4.2(v): Let $i \in I$ and $M_\nu(\tilde{\mathbf{u}}) \ge \theta_2 \ge \theta_1 \ge m(\tilde{\mathbf{u}})$. We need to show that $\tilde{h}_i(\theta_2) \ge (\theta_2 - \theta_1)\left(L_{\kappa,i} + 4\, m(\tilde{\mathbf{u}})^3\, C_{\mathbf{V},i}(\tilde{\mathbf{u}})\right) + \tilde{h}_i(\theta_1)$.

Since $\theta \mapsto \theta^4$ is a convex function on $\mathbb{R}_0^+$, one has $\theta_2^4 \ge 4\, m(\tilde{\mathbf{u}})^3\,(\theta_2 + \theta_1) + \theta_1^4$. As $C_{\mathbf{V},i}(\tilde{\mathbf{u}}) \ge 0$, recalling (4.16d) yields

$$\begin{aligned}\tilde{h}_i(\theta_2) &\ge (\theta_2 - \theta_1)L_{\kappa,i} + \theta_1 L_{\kappa,i} + 4\, m(\tilde{\mathbf{u}})^3\,(\theta_2 - \theta_1)\, C_{\mathbf{V},i}(\tilde{\mathbf{u}}) + \theta_1^4\, C_{\mathbf{V},i}(\tilde{\mathbf{u}}) \\ &= (\theta_2 - \theta_1)\left(L_{\kappa,i} + 4\, m(\tilde{\mathbf{u}})^3\, C_{\mathbf{V},i}(\tilde{\mathbf{u}})\right) + \tilde{h}_i(\theta_1),\end{aligned}$$

thereby establishing the case.

Th. 4.2(vi): For each $i \in I$, one has to show that $L_{g,\nu,i}(\tilde{\mathbf{u}}) < C_{h,\nu,i}(\tilde{\mathbf{u}})$, where $L_{g,\nu,i}(\tilde{\mathbf{u}})$ and $C_{h,\nu,i}(\tilde{\mathbf{u}})$ are according to (4.16i) and (4.16j), respectively.

Taking into account (4.13b), (4.16h), and (A-6), we have $L_{\mathbf{V},i}(\tilde{\mathbf{u}}) \le L_{\mathbf{V}}\, \lambda_3(\omega_i)$. Moreover, recalling $\Lambda_{\alpha,\text{ph}} \ge 0$ for each $\alpha \in J_{\Omega,i}$, (4.16h), and Def. and Rem. 3.2, we obtain

$$L_{\mathbf{V},i}(\tilde{\mathbf{u}}) \le 4\,\sigma\,\epsilon(\tilde{u}_i)\left(\lambda_2(\partial\omega_{s,i} \cap \Gamma_\Omega) + \lambda_2(\omega_i \cap \Sigma)\right) \le 4\, C_{\mathbf{V},i}(\tilde{\mathbf{u}}).$$

These estimates for $L_{\mathbf{V},i}(\tilde{\mathbf{u}})$, combined with (4.16i) and hypothesis (4.15), yield

$$\begin{aligned}L_{g,\nu,i}(\tilde{\mathbf{u}}) &\le \left(M_\nu(\tilde{\mathbf{u}})^3 - m(\tilde{\mathbf{u}})^3\right) L_{\mathbf{V}}\, \lambda_3(\omega_i) + m(\tilde{\mathbf{u}})^3\, 4\, C_{\mathbf{V},i}(\tilde{\mathbf{u}}) + L_{\kappa,i} \\ &< \frac{C_\varepsilon}{k_\nu}\, \lambda_3(\omega_i) + L_{\kappa,i} + 4\, m(\tilde{\mathbf{u}})^3\, C_{\mathbf{V},i}(\tilde{\mathbf{u}}),\end{aligned}$$

i.e., by (4.16g) and (4.16j), $L_{g,\nu,i}(\tilde{\mathbf{u}}) < C_{h,\nu,i}(\tilde{\mathbf{u}})$ as needed.

Hence, all hypotheses of Th. 4.2 are verified, and the conclusion of Th. 4.2 provides a unique vector $\mathbf{u}_\nu \in [m(\tilde{\mathbf{u}}), M_\nu(\tilde{\mathbf{u}})]^I$ such that $\mathcal{H}_{\nu,i}(\tilde{\mathbf{u}}, \mathbf{u}_\nu) = 0$ for each $i \in I$. Since Th. 4.2 also yields that $\mathbf{u}_\nu$ is the only element of $(\mathbb{R}_0^+)^I$ satisfying $\mathcal{H}_{\nu,i}(\tilde{\mathbf{u}}, \mathbf{u}_\nu) = 0$ for each $i \in I$, the proof of Th. 4.3 is complete. ■

Corollary 4.4. *Assume* (A-1) – (A-8), (DA-1) – (DA-7), (AA-1), (AA-2), *and let* $(\mathbf{u}_0, \ldots, \mathbf{u}_{n-1})$, $n \le N$, $\mathbf{u}_\nu = (u_{\nu,i})_{i\in I}$, *be a nonnegative solution to* (3.27) *(where* N *is replaced by* $n-1$*). Then each solution* $\mathbf{u}_n \in \left(\mathbb{R}_0^+\right)^I$ *to* $\mathcal{H}_{n,i}(\mathbf{u}_{n-1}, \mathbf{u}_n) = 0$ *(for each* $i \in I$*), where* $\mathcal{H}_{n,i}$ *is defined by* (3.28), *must lie in* $[m(\mathbf{u}_{n-1}), M_n(\mathbf{u}_{n-1})]^I$, *with* $m(\mathbf{u}_{n-1})$ *and* $M_n(\mathbf{u}_{n-1})$ *defined according to* (4.13c) *and* (4.13d), *respectively. Furthermore, if* k_n *satisfies condition* (4.15), *then there is a unique* $\mathbf{u}_n \in \left(\mathbb{R}_0^+\right)^I$ *that satisfies* $\mathcal{H}_{n,i}(\mathbf{u}_{n-1}, \mathbf{u}_n) = 0$ *for each* $i \in I$. ■

Theorem 4.5. *Assume* (A-1) – (A-8), (DA-1) – (DA-7), (AA-1) *and* (AA-2). *Let*

$$m := \min\left\{\theta_{\text{ext}},\, \operatorname{ess\,inf}(\theta_{\text{init}})\right\}, \tag{4.18}$$

$$M_\nu := \max\left\{\theta_{\text{ext}},\, \|\theta_{\text{init}}\|_{L^\infty(\Omega,\mathbb{R}_0^+)}\right\} + \frac{t_\nu}{C_\varepsilon} \sum_{m\in\{\text{s},\text{g}\}} \|f_m\|_{L^\infty(0,t_\nu,L^\infty(\Omega_m))} \tag{4.19}$$

for each $\nu \in \{0, \ldots, N\}$.

If $(\mathbf{u}_0, \ldots, \mathbf{u}_N) = (u_{\nu,i})_{(\nu,i)\in\{0,\ldots,N\}\times I} \in (\mathbb{R}_0^+)^{I\times\{0,\ldots,N\}}$ *is a solution to the finite volume scheme* (3.27), *then* $\mathbf{u}_\nu \in [m, M_\nu]^I$ *for each* $\nu \in \{0, \ldots, N\}$. *Furthermore, if*

$$k_\nu \left(M_\nu^3 - m^3\right) L_{\mathbf{V}} < C_\varepsilon \qquad \left(\nu \in \{1, \ldots, N\}\right), \tag{4.20}$$

where $L_{\mathbf{V}}$ *is defined according to* (4.13b), *then the finite volume scheme* (3.27) *has a unique solution* $(\mathbf{u}_0, \ldots, \mathbf{u}_N) \in (\mathbb{R}_0^+)^{I\times\{0,\ldots,N\}}$. *It is pointed out that a sufficient condition for* (4.20) *to be satisfied is*

$$\max\left\{k_\nu : \nu \in \{1, \ldots, N\}\right\} \cdot \left(M_N^3 - m^3\right) L_{\mathbf{V}} < C_\varepsilon. \tag{4.21}$$

Proof. The proof is carried out by induction on $n \in \{0, \ldots, N\}$. For $n = 0$, $u_{0,i} = \theta_{\text{init},i}$ for $i \in I$ is uniquely determined by (3.27a). By (AA-2), for each $i \in I$, one has $m \le \operatorname{ess\,inf}(\theta_{\text{init}}) \le \theta_{\text{init},i} \le \|\theta_{\text{init}}\|_{L^\infty(\omega_i,\mathbb{R}_0^+)} \le M_0$, showing $\mathbf{u}_0 \in [m, M_0]^I$. Now, let $N \ge n > 0$. Consider $(\mathbf{u}_0, \ldots, \mathbf{u}_n) \in (\mathbb{R}_0^+)^{I\times\{0,\ldots,n\}}$ satisfying (3.27) with N replaced by n. Then, by induction, we know $(\mathbf{u}_0, \ldots, \mathbf{u}_{n-1}) \in \prod_{\nu\in\{0,\ldots,n-1\}}[m, M_\nu]^I$, and it remains to show $u_n \in [m, M_n]$. By (AA-1):

$$f_{m,n,i} \le \|f_m\|_{L^\infty(t_{n-1},\, t_n,\, L^\infty(\omega_{m,i}))} \le \|f_m\|_{L^\infty(0,t_n,L^\infty(\Omega_m))}. \tag{4.22}$$

Using (4.22) in (4.13a), we infer

$$B_{f,n} = \max\left\{\sum_{m\in\{\text{s},\text{g}\}} f_{m,n,i} \cdot \frac{\lambda_3(\omega_{m,i})}{\lambda_3(\omega_i)} : i \in I\right\} \le \sum_{m\in\{\text{s},\text{g}\}} \|f_m\|_{L^\infty(0,t_n,L^\infty(\Omega_m))}. \tag{4.23}$$

Applying the induction hypothesis, and combining (4.23) with (4.13c) and (4.13d), yields

$$m \leq \min\left\{\theta_{\text{ext}},\, \min\left(\mathbf{u}_{n-1}\right)\right\} = m(\mathbf{u}_{n-1}), \tag{4.24a}$$

$$\begin{aligned} M_n(\mathbf{u}_{n-1}) &= \max\left\{\theta_{\text{ext}},\, \max\left(\mathbf{u}_{n-1}\right) + \frac{k_n}{C_\varepsilon} B_{f,n}\right\} \\ &\leq M_{n-1} + \frac{k_n}{C_\varepsilon} \sum_{m\in\{\text{s},\text{g}\}} \|f_m\|_{L^\infty(0,t_n,L^\infty(\Omega_m))} \leq M_n. \end{aligned} \tag{4.24b}$$

Thus, if $\mathbf{u}_n \in \left(\mathbb{R}_0^+\right)^I$ satisfies the equation $\mathcal{H}_n(\mathbf{u}_{n-1}, \mathbf{u}_n) = 0$, then, according to Cor. 4.4 and (4.24), for each $i \in I$: $m \leq m(\mathbf{u}_{n-1}) \leq u_{n,i} \leq M_n(\mathbf{u}_{n-1}) \leq M_n$, showing $\mathbf{u}_n \in [m, M_n]^I$.

Furthermore, if (4.20) is satisfied, then, by induction, there is $(\mathbf{u}_0, \ldots, \mathbf{u}_{n-1}) \in \prod_{\nu\in\{0,\ldots,n-1\}}[m, M_\nu]^I$ satisfying (3.27) with N replaced by $n-1$, and $(\mathbf{u}_0, \ldots, \mathbf{u}_{n-1})$ is the unique element of $(\mathbb{R}_0^+)^{I\times\{0,\ldots,n-1\}}$ satisfying (3.27) with N replaced by $n-1$. Since (4.20) implies (4.15), Cor. 4.4 provides a unique solution $\mathbf{u}_n \in \left(\mathbb{R}_0^+\right)^I$ to the equation $\mathcal{H}_n(\mathbf{u}_{n-1}, \mathbf{u}_n) = 0$, thereby concluding the proof. ■

Remark 4.6. (a) The L^∞-bound for the solution and the upper bounds for the time step sizes k_ν in Th. 4.5 can be improved by letting, for each $\nu \in \{1, \ldots, N\}$,

$$\tilde{B}_{f,\nu} := \max\left\{\sum_{m\in\{\text{s},\text{g}\}} \|f_m\|_{L^\infty(t_{\nu-1},\, t_\nu,\, L^\infty(\omega_{m,i}))} \cdot \frac{\lambda_3(\omega_{m,i})}{\lambda_3(\omega_i)} \,:\, i \in I\right\}, \tag{4.25}$$

and replacing $t_\nu \sum_{m\in\{\text{s},\text{g}\}} \|f_m\|_{L^\infty(0,t_\nu,L^\infty(\Omega_m))}$ by $\sum_{n=1}^{\nu} k_n \tilde{B}_{f,n}$ in the definition of M_ν in (4.19). Since (AA-1) implies $B_{f,\nu} \leq \tilde{B}_{f,\nu}$ for each $\nu \in \{1, \ldots, N\}$, the proof can be conducted analogous to the proof of Th. 4.5.

(b) If one wants to allow cooling, one needs to discard the condition $f_m \geq 0$ a.e. in (A-5). If one replaces (AA-1) with

$$\operatorname{ess\,inf}(f\restriction_{(t_{\nu-1},t_\nu)\times\omega_{m,i}}) \leq f_{m,\nu,i} \leq \operatorname{ess\,sup}(f\restriction_{(t_{\nu-1},t_\nu)\times\omega_{m,i}}), \tag{4.26}$$

then one can easily extend all our results of the present section to the case where $f_m \geq 0$ a.e. is no longer guaranteed. For instance, if the time step size satisfies a condition analogous to (4.20), then one still has a unique solution to the finite volume scheme (3.27), provided that

$$\begin{aligned} &\sum_{\nu=1}^{N} k_\nu \min\left\{\sum_{m\in\{\text{s},\text{g}\}} \operatorname{ess\,inf}(f\restriction_{(t_{\nu-1},t_\nu)\times\omega_{m,i}}) \cdot \frac{\lambda_3(\omega_{m,i})}{\lambda_3(\omega_i)} \,:\, i \in I\right\} \\ &\leq C_\varepsilon \min\left\{\theta_{\text{ext}},\, \operatorname{ess\,inf}(\theta_{\text{init}})\right\} \end{aligned} \tag{4.27}$$

to ensure $\mathbf{u}_\nu \geq 0$ for each ν. A sufficient condition for (4.27) is

$$\sum_{m\in\{\text{s},\text{g}\}} \operatorname{ess\,inf}(f_m) \leq \frac{C_\varepsilon \min\left\{\theta_{\text{ext}},\, \operatorname{ess\,inf}(\theta_{\text{init}})\right\}}{T}. \tag{4.28}$$

5 Acknowledgments

We thank D. Hömberg, J. Sprekels, and D. Tiba of the *Weierstrass Institute for Applied Analysis and Stochastics (WIAS)*, Berlin, for helpful discussions and advice.

References

[Axe94] O. Axelsson. *Iterative Solution Methods.* Cambridge University Press, Cambridge, UK, 1994.

[CL00] P.G. Ciarlet and J.L. Lions (eds.). *Handbook of Numerical Analysis.* vol. 7, North-Holland/ Elsevier, Amsterdam, The Netherlands, 2000.

[Col68] L. Collatz. *Funktionalanalysis und numerische Mathematik.* Springer-Verlag, Berlin, Germany, 1968 (German).

[DNR+90] F. Dupret, P. Nicodéme, Y. Ryckmans, P. Wouters, and M.J. Crochet. *Global modelling of heat transfer in crystal growth furnaces.* Intern. J. Heat Mass Transfer **33** (1990), no. 9, 1849–1871.

[EGH00] R. Eymard, T. Gallouët, and R. Herbin. *Finite Volume Methods*, pp. 713–1020 in Ciarlet and Lions [CL00], 2000.

[FL01] J. Fuhrmann and H. Langmach. *Stability and existence of solutions of time-implicit finite volume schemes for viscous nonlinear conservation laws.* Applied Numerical Mathematics **37** (2001), 201–230.

[KP03] O. Klein and P. Philip. *Transient numerical investigation of induction heating during sublimation growth of silicon carbide single crystals.* J. Crystal Growth **247** (2003), no. 1–2, 219–235.

[KPSW01] O. Klein, P. Philip, J. Sprekels, and K. Wilmański. *Radiation- and convection-driven transient heat transfer during sublimation growth of silicon carbide single crystals.* J. Crystal Growth **222** (2001), 832–851.

[LT01] M. Laitinen and T. Tiihonen. *Conductive-Radiative Heat Transfer in Grey Materials.* Quart. Appl. Math. **59** (2001), 737–768.

[Mod93] M.F. Modest. *Radiative Heat Transfer.* McGraw-Hill Series in Mechanical Engineering, McGraw-Hill, Inc., New York, USA, 1993.

[Phi03] P. Philip. *Transient Numerical Simulation of Sublimation Growth of SiC Bulk Single Crystals. Modeling, Finite Volume Method, Results.* Ph.D. thesis, Department of Mathematics, Humboldt University of Berlin, Germany, 2003, Report No. 22, Weierstraß-Institut für Angewandte Analysis und Stochastik, Berlin.

[SC78] E.M. Sparrow and R.D. Cess. *Radiation Heat Transfer.* Hemisphere Publishing Corporation, Washington, D.C., USA, 1978.

[Tii97a] T. Tiihonen. *A nonlocal problem arising from heat radiation on non-convex surfaces.* Eur. J. App. Math. **8** (1997), 403–416.

[Tii97b] T. Tiihonen. *Stefan-Boltzmann radiation on non-convex surfaces.* Math. Meth. in Appl. Sci. **20** (1997), 47–57.

[Tii98] T. Tiihonen. *Finite Element Approximation of Nonlocal Heat Radiation Problems.* Mathematical Models and Methods in Applied Sciences **8** (1998), no. 6, 1071–1089.